# OWNER'S MANUAL

## STATIONARY DOCK LIFT

ACTUAL PRODUCT MAY NOT APPEAR EXACTLY AS SHOWN

**⚠ WARNING**

**Do not operate or service this product unless you have read and fully understand the entire contents of this manual. Failure to do so may result in bodily injury or death.**

BLUE GIANT®

STARTING FROM SEPTEMBER 24, 2019 / SERIAL # 0.

ISSUE DATE: MAY 17, 2023 REV. 1.6 (PART # 038-1099)

## Table of Contents


| | | |
|---|---|---|
| 3.0 | ABOUT THE DL-SERIES DOCK LIFT WITH CONTROLS | 5 |
| 3.1 | OWNER'S PURCHASE RECORD | 5 |
| 4.0 | INTRODUCTION | 6 |
| 4.1 | WARRANTY INFORMATION | 6 |
| 4.2 | EXCLUSION OF LIABILITY | 6 |
| 4.3 | MANUFACTURER'S NOTE | 7 |
| 4.4 | OWNER'S RESPONSIBILITY | 7 |
| 5.0 | SAFETY MESSAGE COLOR IDENTIFICATION | 9 |
| 5.1 | OPERATIONAL SAFETY WARNINGS | 9 |
| 6.0 | LOCKOUT / TAGOUT PROCEDURE AND RULES | 11 |
| 6.1 | ELECTROSTATIC SENSITIVE DEVICE PROTECTION POLICY | 12 |
| 7.0 | HOW TO READ THIS MANUAL | 13 |
| 8.0 | CONTROL STATION OPERATION | 14 |
| 8.1 | PUSH BUTTON CONTROLS | 14 |
| 9.0 | DOCK LIFT STRUT AND STAND SET-UP | 17 |
| 9.1 | ENGAGING THE DOCK LIFT MAINTENANCE STRUT | 17 |
| 9.2 | DISENGAGING THE DOCK LIFT MAINTENANCE STRUT | 20 |
| 9.3 | ENGAGING THE DOCK LIFT SERVICE STAND | 21 |
| 9.4 | DISENGAGING THE DOCK LIFT SERVICE STAND | 22 |
| 10.0 | MAINTENANCE | 23 |
| 10.1 | PLANNED MAINTENANCE PROGRAM (PMP) | 23 |
| 10.2 | OPERATOR DAILY INSPECTION | 23 |
| 10.3 | ROUTINE SERVICING AND MAINTENANCE | 23 |
| 10.4 | PLANNED MAINTENANCE PROGRAM INTERVALS | 23 |
| 10.5 | MAINTENANCE SEQUENCE | 23 |
| 10.6 | CHECKING ROLLERS / BEARINGS | 24 |
| 10.7 | DAILY MAINTENANCE PROCEDURES (DMP) CHECKLIST | 25 |
| 10.8 | LUBRICATION POINTS AND POWERPACK RESERVOIR LEVEL | 27 |
| 11.0 | OPERATING INSTRUCTIONS | 28 |
| 11.1 | LOAD TRANSFER | 28 |
| 11.2 | RAISING LIFT | 28 |
| 11.3 | LOWERING LIFT | 32 |
| 12.0 | DECAL IDENTIFICATION AND LOCATION | 37 |
| 12.1 | OPERATION PLACARD | 38 |
| 13.0 | EQUIPMENT COMPONENT ILLUSTRATIONS | 40 |
| 13.1 | COMPONENTS AS SHIPPED CHECKLIST | 40 |
| 13.2 | MECHANICAL ASSEMBLY | 41 |
| 13.3 | DOCK LIFT PARAMETERS | 46 |
| 14.0 | POWERPACK PART IDENTIFICATION | 48 |
| 15.0 | TROUBLESHOOTING | 49 |
| 16.0 | OPTIONAL EQUIPMENT | 51 |
| 16.1 | CUSTOM LIP CONFIGURATIONS | 51 |
| 16.2 | SAFETY FEATURES | 51 |
| 16.3 | CONVENIENCE FEATURES | 51 |

# 3.0 ABOUT THE DL-SERIES DOCK LIFT WITH CONTROLS

The Blue Giant DL-Series Hydraulic Dock Lift is a high performance system. The DL-Series provides loading/unloading options when a facility must handle a variety of trailer or vehicle heights. The deck is constructed with beams welded at dynamic impact points to provide a sturdy deck support. Hydraulic components increase operating efficiency, operator safety, and reduce maintenance requirements.
The **Two Push Button Control Station** controls an independent hydraulic dock lift via by **UP** and **DOWN** push button controls.

## 3.1 OWNER'S PURCHASE RECORD

Please record information for future inquiries and to validate warranty. See "4.1 WARRANTY INFORMATION" on page 7.

| | |
|---|---|
| **Dealer:** | **Date in Service:** |
| | **Number of Units:** |
| **Serial Number:** | **Door #:** |
| **Serial Number:** | **Door #:** |
| **Serial Number:** | **Door #:** |
| **Serial Number:** | **Door #:** |
| **Serial Number:** | **Door #:** |
| **Serial Number:** | **Door #:** |
| **Serial Number:** | **Door #:** |
| **Serial Number:** | **Door #:** |
| **Serial Number:** | **Door #:** |

The manufacturer offers a full line of dock lifts, dock levelers, dock safety equipment, accessories, ergonomic equipment, scissor lift equipment, seals and shelters, and industrial trucks. Concurrent with a continuing product improvement program, specifications are subject to change without notice (See "4.2 EXCLUSION OF LIABILITY" on page 7). Please contact the your Blue Giant Dealer for latest information. Some features illustrated may be optional in certain market areas.

| NOTICE |
|---|
| See "12.0 DECAL IDENTIFICATION AND LOCATION" on page 38 for serial number location. |

# 4.0 INTRODUCTION

The following is a quick reference to important procedures that must be followed while using the Dock Lift System. It is not intended to cover, or suggest that it does cover, all procedures necessary to ensure safe operation. All owners and operators should be aware of and abide by all workplace safety regulations applicable to the inspection and operation of the dock lift. These laws and regulations include but are not limited to:

- The Occupational Safety and Health Act
- Canada Occupational Health and Safety Regulations
- Occupational Safety and Health Acts for Individual States (USA), Provinces, or Territories.
- ANSI standard MH29.1

For additional information on these regulations as well as industry standards that may apply to this product, please contact:

American National Standards Institute (ANSI)
1430 Broadway
New York, NY 10018
Telephone: 212.642.4900
www.ansi.org

Lift Manufacturers Product Group (LIFT)
A Product Section of Material Handling Industry of America
A Division of Material Handling Industry
8720 Red Oak Blvd, Suite 201
Charlotte, NC, 28217-3992
Telephone: 704.676.1190
www.mhi.org/lift

# 4.1 WARRANTY INFORMATION

Thank you for purchasing Blue Giant products. We appreciate your business, and are confident that our product will serve you for many years to come. In the event that you experience a problem with our product, our Customer Support Team is here to support the Blue Giant Product(s) that you have purchased.

To validate warranty on recently purchased equipment, please complete and submit your information with our on-line Warranty Registration at www.BlueGiant.com.

For more information about Blue Giant Warranty Support, please contact your Blue Giant Dealer. You may also visit www.BlueGiant.com or phone 1.800.872.2583.

**NOTE: All products must be registered to qualify for warranty.**

| DEALER INFORMATION |
|---|
| Name: |
| Contact: |
| Telephone: |

# 4.2 EXCLUSION OF LIABILITY

To the maximum extent permitted by applicable law, the manufacturer assumes no liability for damage or injury to persons or property that occur as a result of use of the Dock Lift Equipment. Furthermore, to the maximum extent permitted by applicable law, the manufacturer does not assume any liability for lost profits, operating downtimes, consequential, indirect, incidental, special, exemplary, punitive or enhanced damages, or similar losses, whether incurred by owner, authorized users and other third parties. By use of the Dock Lift Equipment, owner assumes all risk of liability for damage or injury to persons or property that occur as a result of use of the Dock Lift Equipment, including, with respect to owner, authorized users and other third parties.

The manufacturer reserves the right to make changes at any time to the modules, components, and accessories, concurrent with its continuing product improvements and development program. Specifications, operating instructions, and illustrations included in this manual are subject to change without advance notice. As the Dock Lift Equipment is a highly customizable product, please contact the

manufacturer by telephone at 1.800.872.2583 for the latest information.

## 4.3 MANUFACTURER'S NOTE

The dock lift equipment has been carefully inspected and tested at the manufacturer's plant prior to shipment, but **MUST be checked** upon receipt for transport damage. Any observed transport damage is to be listed on the signed copy of the freight document. There are many configurations or custom designs whose specifications may not be fully reflected in this manual. Contact your Blue Giant Dealer to obtain the General Arrangement drawing for application specific designs.

**Notify the freight forwarder and the dealer of any damage WITHIN 24 HOURS.**

## 4.4 OWNER'S RESPONSIBILITY

The dock lift equipment needs to be maintained and inspected by the owner to verify its safe condition for operation.

1. The owner should recognize the inherent danger of the interface between the dock lift equipment and the freight carrier. The owner should, therefore, train and instruct operators in the safe use of the dock lift equipment and accessories in accordance with the manufacturer's recommendations.
2. The owner should thoroughly familiarize themselves with the following procedures and specifications as referenced in this manual, and request immediate replacement of all manufacturer-supplied documents that are missing, damaged, or otherwise illegible.
   Owners shall apply sound principles of safety, training, inspection, maintenance, and expected operating environment toward their dock lift equipment usage and maintenance requirements.
   - Commissioning instructions
   - Operating instructions
   - Daily maintenance procedures checklist
   - Inspections procedures
   - Recommended spare parts lists

   Upon receipt of any newly purchased dock lift equipment, the owner shall verify the presence of owner's manuals, operating placards, and any other documentation necessary for training dock personnel how to use the equipment safely and effectively.
3. All Blue Giant dock lift equipment shall undergo regularly scheduled planned maintenance. Maintenance requirements will vary according to usage frequency and application, so the owner shall contact with their authorized Blue Giant distributor for schedule recommendation. Written records of the performance of these procedures shall be kept as per warranty requirements and per local state or provincial requirements. Please see"8.0 MAINTENANCE" on page 27.
4. Dock lift equipment that is structurally damaged, experiencing performance irregularities, or has been potentially compromised shall be removed from service until a trained and authorized manufacturer's representative can conduct an inspection and perform any necessary repairs.
5. As with any piece of machinery, dock lift equipment requires routine maintenance, lubrication, and adjustments. Recommended procedures are itemized in the Planned Maintenance Program (PMP) checklist included in installation and technical manuals. It is recommended that for anything other than the basic maintenance procedures outlined in this manual, please contact your Blue Giant Dealer.
6. The owner shall ensure that all nameplates and safety labels are in place and legible, and that the appropriate manuals are provided to authorized users. Replacement nameplates, safety labels, and manuals are available through the Blue Giant Aftermarket Department. See "12.0 DECAL IDENTIFICATION AND LOCATION" on page 38 in this manual for more information.
7. The owner or a trained and authorized representative shall verify that all freight carrier brakes have been applied and a vehicle restraint and/or wheel chocks properly engaged before cross-docking procedures begin. For safety reasons, trailers must be held securely in place to avoid accidental separation from the loading dock.
8. Unless specifically agreed to in writing by Blue Giant Equipment Corporation at the time of order (and prior to manufacture), all Blue Giant dock lift equipment is sold as a complete offering and must not be altered or added to in any manner (which includes configuration and function) without written permission from an authorized manufacturer's representative. These changes shall also satisfy all safety recommendations of the original equipment manufacturer for the particular application of the dock lift equipment.
9. If, at the request of the owner, Blue Giant does not supply all or some of the dock lift equipment power unit and/or control panel components, the owner shall assume responsibility for any and all operational and safety issues associated with the resulting configuration.
10. The owner must adhere to the load classification information provided on the product nameplate. Failure to do so will void product

warranty and can result in serious injury, including death.

11. Operational placard must be visible from equipment location and permanently attached to a wall or structure.
12. The owner shall ensure that inspections are performed to the lifting device as prescribed by law or regulation.

# 5.0 SAFETY MESSAGE COLOR IDENTIFICATION

This manual includes color-coded safety messages that clarify instructions and specify areas where potential hazard exists. To reduce the possibility of equipment damage and serious injury or death, please follow the instructions and understand the warnings contained in the messages. If warning decals become damaged or missing, replace them immediately. Avoid accidents by recognizing dangerous procedures or situations before they occur.

| DANGER |
|---|
| Serious injury or death will likely occur if the instructions are not followed. |

| WARNING |
|---|
| Serious injury or death may occur if the instructions are not followed. |

| CAUTION |
|---|
| Instructions marked caution concern safe operating procedure. Failure to comply may result in personal injury. |

| NOTICE |
|---|
| Procedures marked notice must be followed in order to reduce damage to machinery. |

# 5.1 OPERATIONAL SAFETY WARNINGS

These are safety warnings that may be part of a procedure or hardware warning decal.

**DANGER**

- Do not enter the pit area below the dock lift.
- BEFORE BEGINNING ANY SERVICE PROCEDURES:
  – Disconnect the power and follow all lockout / tagout procedures, as per OSHA requirements. Refer to wiring diagrams.
- Never operate a broken or damaged dock lift. Repair immediately by a qualified service technician.
- All loads must be centered and secured from rolling off the platform. Loose or unbalanced loads are dangerous.
- While transferring load across lip to truck bed or finished floor, be aware of potential fall risks from table and lip edges.

**WARNING**

- The lip hinge is a hazardous pinch point. Do not use fingers or hands to remove foreign materials.
- Hinged lips may drop unexpectedly, keep people and objects clear of the area immediately under or near the lip.
- Post safety warnings and barricade working area around the dock lift and at ground level (if pit opens to driveway) to reduce unauthorized use of the lift during maintenance/service.
- Lift operator must be present during all steps of this procedure and keep an unobstructed view of lift to ensure safe operation. Never leave the dock lift unattended in the raised position.
- Never leave loads sitting on the dock lift.
- Do not use the dock lift if the lip's full width is not fully supported by at least four (4) inches (100 mm) of the vehicle load bed or floor.
- Do not operate the dock lift beyond its rated capacity. Before load transfers, verify the load does not exceed the single axle rolling load maximum rating as found on nameplate of the dock lift.
- Do not drive or walk onto the truck until it is parked against the dock bumpers and the wheels are chocked, or the vehicle restraint has been fully engaged.
- Never attempt to lift or hold the lip out by hand unless instructed by this manual and using caution. Serious personal injury could occur.
- Never remove the wheel chocks until loading/ unloading is finished and the truck driver has been given permission to depart.

**⚠ CAUTION**

- Only trained personnel should operate or service this equipment.
- Do not operate the dock equipment until the transport vehicle is parked against the dock bumpers.
- Always park the dock lift equipment after use.
- Conduct routine inspections and maintenance. Failure to do so could cause equipment damage and or personal injury.
- Always contact your Blue Giant Dealer immediately if a malfunction occurs.

**NOTICE**

- Do not ground welding equipment to any electrical components.
- Do not attach welder as ground to lift platform when welding on base frame assembly. Attach welder ground to base frame assembly only.
- Do not allow the drill to go too deeply when drilling holes in the control box. Damage to the control systems may occur.
- Never use air to blow debris from control box. Use a vacuum to remove debris from control box.
- Do not connect green ground lead into control box until all welding has been completed.
- Always keep the work area clean and free of litter.
- Always clean all side openings of dirt and debris.
- Always clean all dirt and debris from the lip hinge.
- Always clean up dry and liquid spills immediately after they occur.
- Always maintain proper lighting in the work area.
- If a procedure is not clearly defined in this manual, contact your Blue Giant Dealer.

# 6.0 LOCKOUT / TAGOUT PROCEDURE AND RULES

In accordance with the rules and regulations of the Occupational Safety and Health Administration (OSHA) and/or local jurisdiction, all affected employees must be notified that the machine or equipment will be shut down and locked out to perform repair or maintenance work.

The work area must be checked to verify that all personnel have been removed or safely repositioned.

The machine or equipment power supply shall be locked in the **OFF** position or disconnected from the energy source.

Blue Giant strongly recommends that only OSHA-approved and/or local jurisdiction lockout devices and procedures be utilized.

The energy isolating device must bear a prominent warning tag indicating that work is being done on the equipment and the name of the authorized employee responsible for the lockout.

It is mandatory that tagout notices shall **NOT** be susceptible to deterioration or illegibility due to weather conditions, exposure to chemicals and/or moisture.

**WARNING**

- Always lockout and tagout any power source before performing any work on any electrical devices or electrical controls according to OSHA regulations and approved local electrical codes. Refer to wiring diagrams.

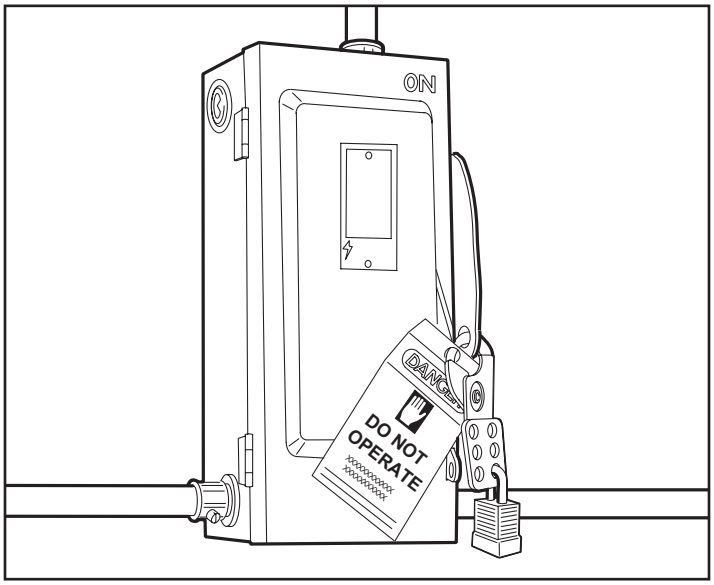


An example of lockout / tagout. Verify and comply with local codes/ regulatory requirements.

## 6.1 ELECTROSTATIC SENSITIVE DEVICE PROTECTION POLICY

This policy applies to static sensitive electronic products primarily printed circuit boards (PCBs) and sensors. Switches, relay, lamps and wire are not sensitive and do not apply.

If welding near ESD components, correctly protect and ground all necessary equipment.

1. Prior to handling PCBs, wear a static grounding wrist strap and clip it to an electrical ground. The metal plate on the inside of the wristband must be in contact with the wearers skin.
2. PCBs should never be handed to other personnel or set down anywhere.
3. Place PCBs in black ESD shielding bags for return or storage. Only one PCB or sensor should be placed in a static bag. Attach paperwork and other items to the outside with adhesive pouches or elastic bands.
4. The control boxes protect the PCBs inside from static, and should not be used to store manuals or other accessories.

# 7.0 HOW TO READ THIS MANUAL

This Owner's Manual covers standard operating steps for the Blue Giant Dock Lifts. There are many configurations or custom designs whose specifications may not be fully reflected in this manual. Contact your Blue Giant Dealer to obtain the General Arrangement drawing for application specific designs.

Operating and control instructions are found in "6.1 PUSH BUTTON CONTROLS" on page 17 and "12.0 DECAL IDENTIFICATION AND LOCATION" on page 38.

Maintenance instructions and troubleshooting information are found in "7.0 DOCK LIFT STRUT AND STAND SET-UP" on page 21, "8.0 MAINTENANCE DEVICE" on page 16, "8.0 MAINTENANCE" on page 27, and "13.0 TROUBLESHOOTING" on page 53.

# 8.0 CONTROL STATION OPERATION

Depending on the specific installation, the control station may be mounted on a guard rail attached to the dock lift, on a separate guard post, or on an adjacent wall. See “11.0 OPERATING INSTRUCTIONS” on page 29 for more information.

## 8.1 PUSH BUTTON CONTROLS

This section describes the push button controls to operate the dock lift. For further options, see “16.2 SAFETY FEATURES” on page 52

**DANGER**

- While lift is moving, keep people and objects clear of areas under the platform and in the immediate lift area.
- Fully read and understand the lift operation. Practice safe load transfer methods. If you do NOT understand the complete lift operating procedure and safe load transfer methods (i.e. safe braking during transfer), refer to the Owner/Operator regarding local regulatory/jurisdictional and facility requirements.
- While transferring load across lip to truck bed or finished floor, be aware of potential fall risks from table and lip edges.

**WARNING**

- Lift operator(s) must be present during all steps of this procedure.
- Lift operator(s) must keep an unobstructed view of lift, any operation light/horn/bell, and other operators to ensure safe operation.
- Only one (1) rider/operator is permitted on the deck when lift is in motion.
- Do not exceed (rated/lifting) capacity or load classification of lift as listed on the manufacturer/product nameplate. Capacity includes: forklift/manual equipment, pallet(s), material(s)/goods, operator, and any other objects on the deck/platform. See “2.4 OWNER’S RESPONSIBILITY” on page 8. For nameplate location, see “12.0 DECAL IDENTIFICATION AND LOCATION” on page 38.
- To avoid bodily injury, stand clear of lift while it is moving.
- Do not stand on, manually force, or apply weight to hinged lip unless it is supported by the ground or by a 4 in. (100 mm) minimum overlap with trailer bed.
- Never attempt to stand or apply weight to hinged lip if supported solely by lip chains.
- Hinged lips may drop unexpectedly, keep people and objects clear of the area immediately under or near the lip.
- All hinged lips must be in the raised position and chained to an on deck guardrail or post while the dock lift is in motion.
- All personnel restraint chains must be engaged, on the guard rail hooks, across any open sections of the deck while the dock lift is in motion.

- **UP push button**

The **UP** push button control starts the hydraulic Powerpack to apply pressure via the lift cylinders and raise the deck of the lift at a safe speed.

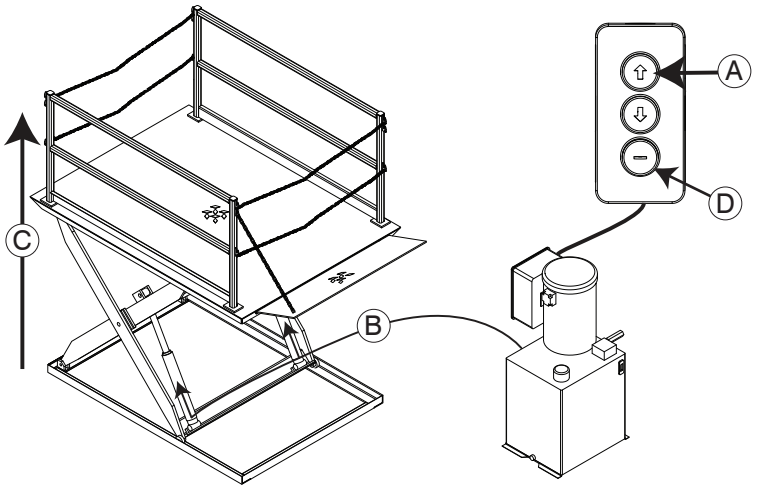


| Callout | Description |
|---|---|
| A | Press the **UP** push button |
| B | Powerpack delivers oil to cylinders increasing hydraulic pressure |
| C | Direction of Deck travel |
| D | Key Interlock (if present) |

- **DOWN push button**

The **DOWN** push button control opens the hydraulic pressure release valve to drain oil back into the oil reserve of the Powerpack. This causes the lift to lower at a controlled and safe speed.

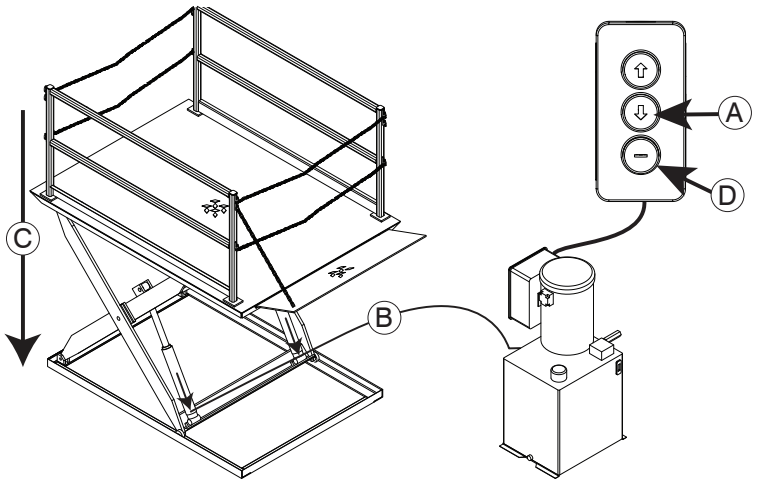


| Callout | Description |
|---|---|
| A | Press the **DOWN** push button |
| B | Powerpack releases oil back into reservoir and releases hydraulic pressure |
| C | Direction of Deck travel |
| D | Key Interlock (if present) |

- **HYDRAULIC LIP push button UP and push button DOWN**

The **HYDRAULIC LIP UP** push button control starts the hydraulic Powerpack to apply pressure via the lip cylinder and raise the lip at a safe speed. Release push button when the lip is in the fully raised position. Hook lip chain to deck side guard post when complete.

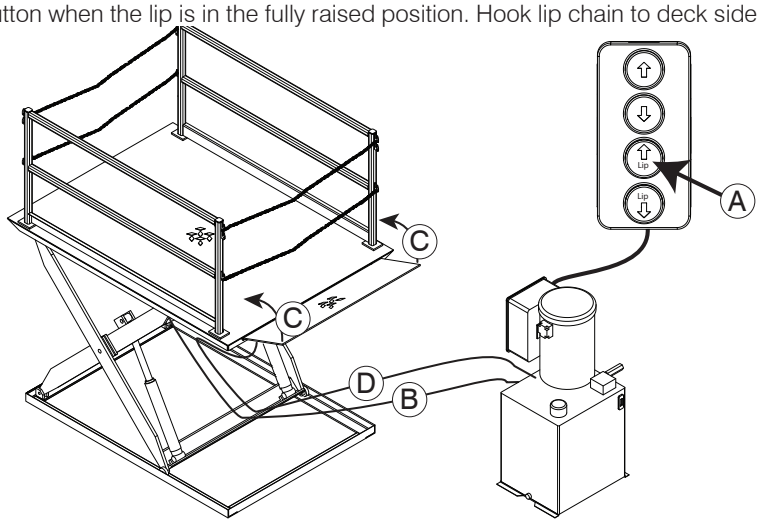


| Callout | Description |
|---|---|
| A | Press the **HYDRAULIC LIP UP** push button (if present) |
| B | Powerpack delivers oil to cylinders increasing hydraulic pressure |
| C | Direction of Lip travel |
| D | Powerpack delivers oil to hydraulic lip cylinder to raise lip |

Unhook lip chain from deck side guard post before attempting. The **HYDRAULIC LIP DOWN** push button control opens the hydraulic pressure release valve to drain oil back into the oil reserve of the Powerpack. Release push button when the lip is fully lowered to the ground or the trailer bed.

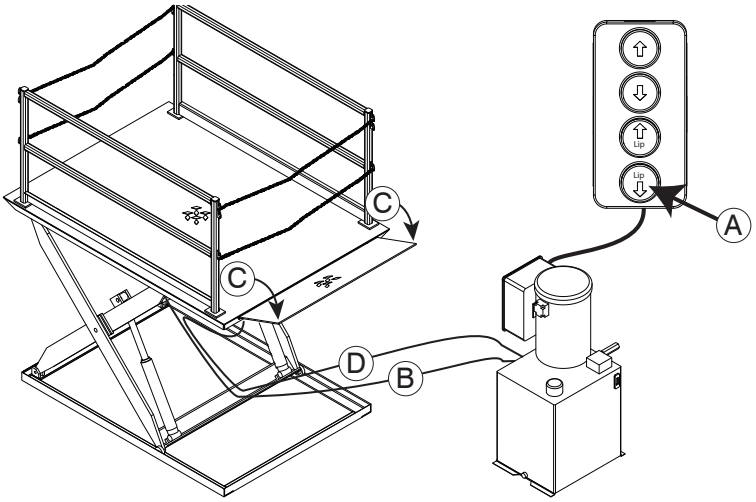


| Callout | Description |
|---|---|
| A | Press the **HYDRAULIC LIP DOWN** push button (if present) |
| B | Powerpack releases oil back into reservoir and releases hydraulic pressure |
| C | Direction of Lip travel |
| D | Powerpack releases oil back into reservoir and releases hydraulic pressure to lower lip |

# 9.0 DOCK LIFT STRUT AND STAND SET-UP

This section describes the different functions of the lift Maintenance Strut and the Service Stand. These procedures require at least temporary electrical power for the Powerpack to raise and lower the lift.

## 9.1 ENGAGING THE DOCK LIFT MAINTENANCE STRUT

The Maintenance Strut is engaged to perform cleaning or visual inspection under the dock lift.

**DANGER**

- Failure to properly secure the dock lift deck prior to working underneath it may result in bodily injury or death.
- Engage the Maintenance Strut before visual inspecting or cleaning under the deck. If the strut cannot be successfully engaged, contact your Blue Giant Dealer.

**WARNING**

- Post safety warnings and barricade work area at dock and ground level. Notify all affected personnel that work is being performed on the unit and follow proper lock-out procedure. Verify that power to the unit has been completely cut off and cannot be turned back on accidentally, as per OSHA requirement.
- Head protection and other applicable PPE is recommended when working under or around the raised deck.
- Service Stand must be used with the Maintenance Strut when working under the lift. (i.e. more than cleaning or visually inspecting)
- Install Service Stand only when the Maintenance Strut is fully deployed.

**CAUTION**

- It is recommended that a retrieval tool be used when retrieving or replacing the Maintenance Strut from its stored position
- It is recommended that this procedure be performed with assistance.

1. Examine the Maintenance Strut for damage or if it is missing. Contact your Blue Giant Dealer for service or repair, as required.
2. Press the **DOWN** push button to lower the dock lift to the lowest height position.
3. Clear any load or debris on the lift's deck.
4. If present, manually lift any lip into the vertical position and hook up the lip chain(s) from guard rail to lip anchor. If hydraulic lip is present, press the **Lip UP** push button to raise it then hook up the lip chain. See "6.1 PUSH BUTTON CONTROLS" on page 17.
5. Hook up personnel restraint chains between guard rails at the lip or open ends.
6. When the area around the dock lift is clear of personnel, equipment, and materials, press the **UP** push button to raise the lift to a point where it is safe to deploy Maintenance Strut then release the push button.
7. Flip or move the Maintenance Strut into the locked position. Only reach in far enough with a body part to move the Maintenance Strut.
8. Press the **DOWN** push button to lower the lift until the Maintenance Strut is fully braced against the lower frame of the lift.
9. When the Maintenance Strut is fully braced and holding the lift in position, an authorized person shall lock out and tag out the electrical connections to the lift hydraulic Powerpack.
10. If safe to do so, use an extension tool to clear any debris or material from under the lift.
11. Inspect the lift without being near, on, or placing yourself/anyone under the lift (and pit, if present).

**Drop-in Style Maintenance Strut**

**Part# 1005834-01 and 1005834-02**

Applicable to a lift table with a self-weight maximum of 3000 lbs or less. For all other requirements, contact your Blue Giant Dealer.

This Maintenance Strut is found on:

- 8 in. lowered height DL table with 4 in. wide legs
- 12 in. lowered height DS/EDD tables

This Maintenance Strut is rated for standard DL table with a maximum capacity of 6000 lbs and EDD/DS table with a maximum capacity of 4000 lbs. It is added to right leg out weldment unless otherwise specified.

| Frame Length | Raised Height 32 in. or higher | Raised Height 38 in. or higher | Raised Height 48 in. or higher |
|---|---|---|---|
| 42 in. to 46 in. | 8 in. long strut (Part# 1005834-02) | Not Applicable | Not Applicable |
| 46 in. to 60 in. | - | 10 in. long strut (Part# 1005834-01) | Not Applicable |
| 60 in. to 96 in. | - | - | 10 in. long strut (Part# 1005834-01) |

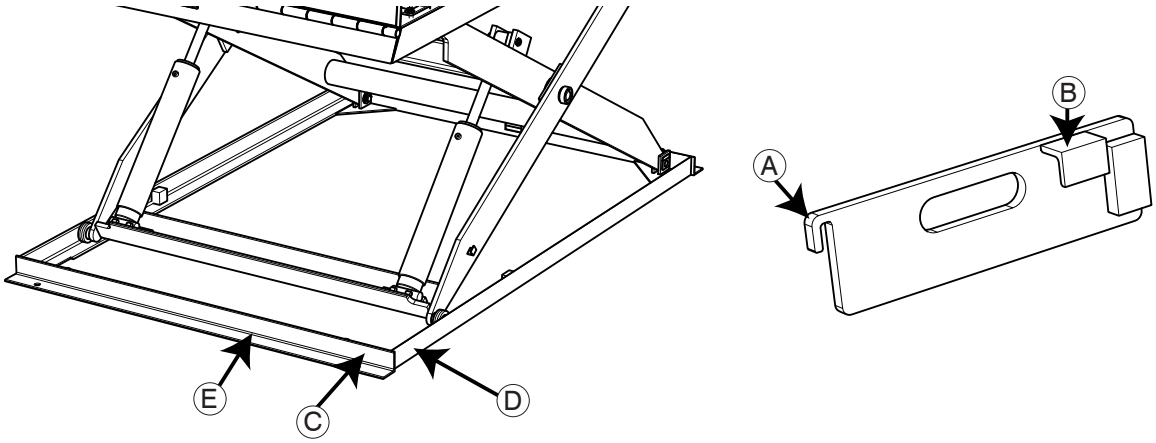


| Callouts | Description |
|---|---|
| A | Rolling end hook side |
| B | Wheel track side |
| C | Hook A on this edge |
| D | Hook B on this edge |
| E | Storage area of drop-in Maintenance Strut. Not on concrete. |

**Part# 828-418-1, 828-418-3, and 838-702**

This Maintenance Strut is stored within the lower frame of the lift. There is one strut per table and is applicable to tables with a total self-weight maximum between 3000 lbs or less.

This stand alone drop-in style Maintenance Strut available in 12 in. (Part# 828-418-1), 14 in. (Part# 828-418-3), and 18 in. (Part# 838-702) lengths.

It is an optional line item for all DL tables and is available as an additional safety device.

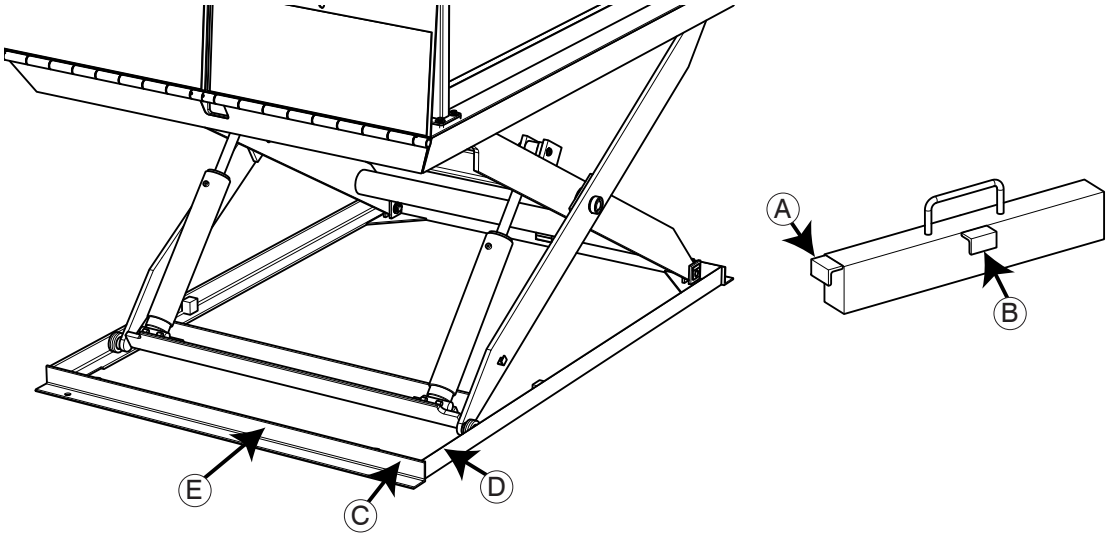


| Callouts | Description |
|---|---|
| A | Rolling end hook side |
| B | Roller track side |
| C | Hook A on this edge |
| D | Hook B on this edge |
| E | Storage area of drop-in Maintenance Strut. Not on concrete. |

Attached chain keeps the Maintenance Strut nearby for easy use. Store away from moving parts of the table.

**Flip Style Maintenance Strut**

**Part# 31-009696-1**

Quantity one per table, this Maintenance Strut applicable to tables with a total self-weight maximum of 3500 lbs or less.

Quantity two per table, this Maintenance Strut applicable to tables with a total self-weight maximum between 3500 lbs to 7500 lbs.

All other requirements, contact your Blue Giant dealer.

All DL/FS/EDD/DS 10 in. lowered height and up will take a flip-style Maintenance Strut.

Frame sizes 60 in. or larger, and a raised height above 48 in. need a 14 in. long flip-style Maintenance Strut.

For a table capacity of 8000 lbs and a frame length of 96 in. or a frame length less than 96 in., one flip-style Maintenance Strut is required and is located to the right outer leg weldment.

For table capacities about 10000 lbs or longer than a 96 in. frame length, two flip-style Maintenance Struts are required. There is one Maintenance Strut per each outer leg weldment.

| Table Capacity | Frame length 60 in. to 96 in. | Frame length 96 in. to 132 in. |
|---|---|---|
| 8000 lbs or less | 1 strut | 2 struts |
| 10,000 lbs to 20,000 lbs | 2 struts | 2 struts |

Non-standard smaller raised height tables may require a shorter Maintenance Strut, contact your Blue Giant Dealer.

One flip-style Maintenance Strut

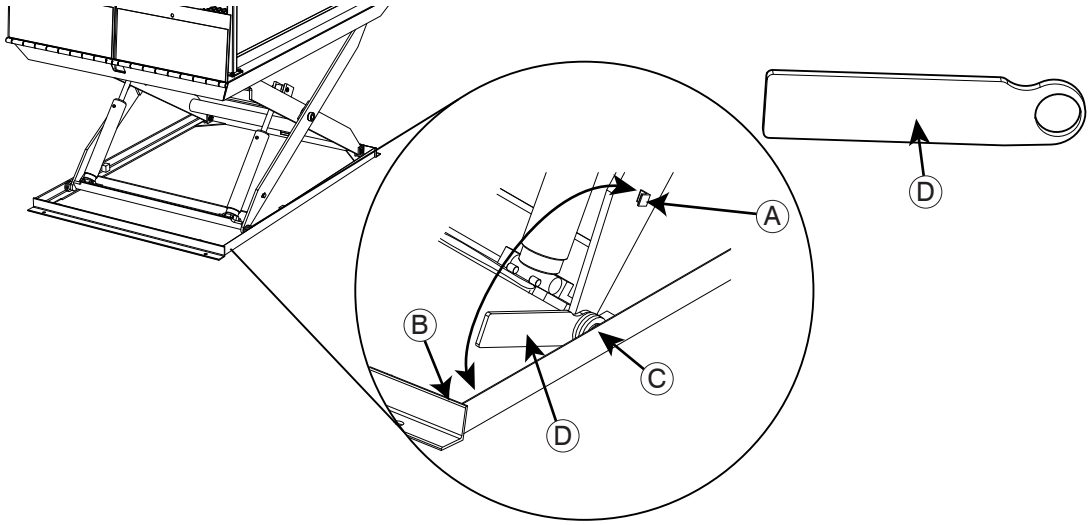


| Callout | Description |
|---|---|
| A | Store flip-style strut here |
| B | Engage flip-style strut here |
| C | Leg Roller / Bearing |
| D | Flip Style Maintenance Strut |

Two flip-style Maintenance Strut

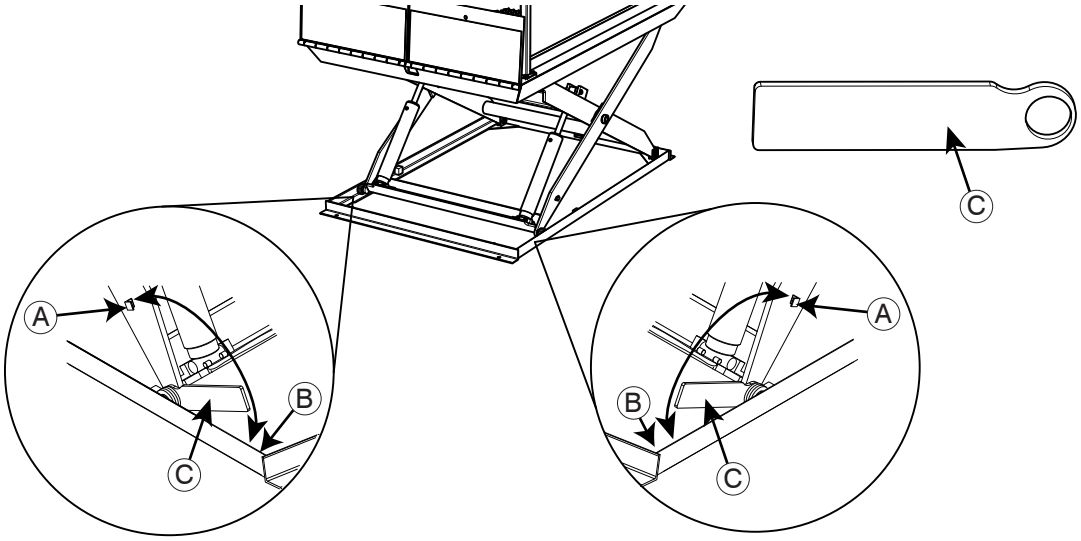


| Callout | Description |
|---|---|
| A | Store flip-style strut here |
| B | Engage flip-style strut here |
| C | Two (2) Flip Style Maintenance Struts |

## 9.2 DISENGAGING THE DOCK LIFT MAINTENANCE STRUT

The Maintenance Strut is disengaged after a cleaning or visual inspection is completed under the dock lift.

**DANGER**

- Failure to properly secure the dock lift deck prior to working underneath it may result in bodily injury or death.
- Engage the Maintenance Strut AND Service Stand before working. If the strut cannot be successfully engaged, contact your Blue Giant Dealer.

**WARNING**

- Post safety warnings and barricade work area at dock and ground level. Notify all affected personnel that work is being performed on the unit and follow proper lock-out procedure. Verify that power to the unit has been completely cut off and cannot be turned back on accidentally, as per OSHA requirement.
- Head protection and other applicable PPE is recommended when working under or around the raised deck.
- Service Stand must be used with the Maintenance Strut when working under the lift. (i.e. more than cleaning or visually inspecting)
- Install Service Stand only when the Maintenance Strut is fully deployed.
- Do not stand in the pathway of the dock lift during the disengagement process in case the dock falls unexpectedly.

**CAUTION**

- It is recommended that a retrieval tool be used when retrieving or replacing the Maintenance Strut from its stored position
- It is recommended that this procedure be performed with assistance.

Flip Style Maintenance Strut and Drop-in Style Maintenance Strut

1. Examine the Maintenance Strut for damage or if it is missing. Contact your Blue Giant Dealer for service or repair, as required.
2. When all work is completed and the area around the lift is cleared, an authorized person shall inform all affected personnel before removing the lock out and tag out from the electrical connections to the lift hydraulic Powerpack.
3. Press the **UP** push button to gently raise the lift off of the Maintenance Strut.
4. Flip or lift out the Maintenance Strut to the stored position. Use an extension tool (i.e. broom handle or wood) to move the Maintenance Strut. As much as possible, never reach in with a body part to move the Maintenance Strut.
5. Press the **DOWN** push button to lower the lift to ground or lowest height position then release the button.

## 9.3 ENGAGING THE DOCK LIFT SERVICE STAND

The Service Stand is engaged to perform servicing, repair, or diagnostic testing under the dock lift.

**DANGER**

- Failure to properly secure the dock lift deck prior to working underneath it may result in bodily injury or death.
- Engage the Maintenance Strut AND Service Stand before working. If both cannot be successfully engaged, contact your Blue Giant Dealer.
- Never engage the Service Stand on the rolling end of the dock lift.

**WARNING**

- Post safety warnings and barricade work area at dock and ground level. Notify all affected personnel that work is being performed on the unit and follow proper lock-out procedure. Verify that power to the unit has been completely cut off and cannot be turned back on accidentally, as per OSHA requirement.
- It is recommended that this procedure be performed with assistance.
- Head protection and other applicable PPE is recommended when working under or around the raised deck.
- Service Stand must be used with the Maintenance Strut when working under the lift. (i.e. more than cleaning or visually inspecting)
- Install Maintenance Strut and secondary Service Stand only when the unit is sufficiently raised.

**CAUTION**

- It is recommended that a retrieval tool be used when retrieving or replacing the Maintenance Strut from its stored position
- It is recommended that this procedure be performed with assistance.

The dock lift may be equipped with a one (1) or two (2) Maintenance Strut(s) that **MUST** be used in conjunction with one (1) Service Stand, during under-dock inspections or repairs / maintenance. If the rated capacity of the dock lift is 10,000 lbs (4536 kg) or greater, OR have a deck length longer than 108 in. (2743 mm), a second Maintenance Strut (or a second Service Stand) must be used. Verify the number of Service Stands required before attempting to secure the deck.

To apply the Service Stand, one person raises the deck while another puts the strut in place.

It is recommended that a retrieval tool be used when retrieving the Maintenance Strut from its stored position beneath the dock.

This is a two person operation.

1. Set the Service Stand for the required length, if it is adjustable.
2. Follow the procedure to engage the Maintenance Strut before attempting to set up the Service Stand.
3. When the Maintenance Strut is full braced against the lower frame of the lift, slide the Service Stand in the vertical position between a lower frame cross beam and a lift deck edge/cross beam on the same side.
   Do NOT stand or hold any body parts under the lift is fully secured by the Service Stand.
4. Test the firmness of the Service Stand as it holds the dock lift, if necessary use additional suitable blocking if Maintenance Strut is inoperable.
5. Verify any Lockout/Tagout conditions or that the Powerpack is not electrically powered.

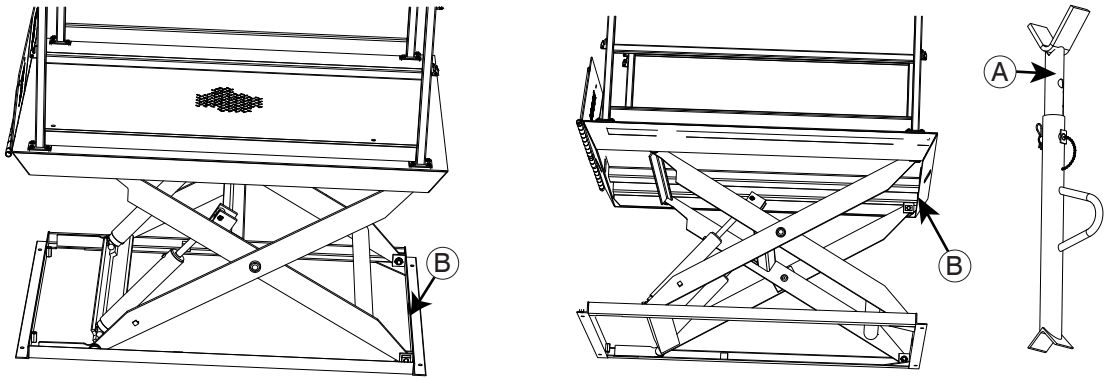


| Callout | Description |
|---|---|
| A | Service Stand Part# 796-710-1; adjustable length 26 in. to 45 in. |
| B | Engage Service Stand here for fixed end top and bottom |

## 9.4 DISENGAGING THE DOCK LIFT SERVICE STAND

The Service Stand is disengaged after servicing, repair, or diagnostic testing under the dock lift.

**DANGER**

- Failure to properly secure the dock lift deck prior to working underneath it may result in bodily injury or death.
- Engage the Maintenance Strut AND Service Stand before working. If both cannot be successfully engaged, contact your Blue Giant Dealer.
- Never engage the Service Stand on the rolling end of the dock lift.

**WARNING**

- Post safety warnings and barricade work area at dock and ground level. Notify all affected personnel that work is being performed on the unit and follow proper lock-out procedure. Verify that power to the unit has been completely cut off and cannot be turned back on accidentally, as per OSHA requirement.
- Head protection and other applicable PPE is recommended when working under or around the raised deck.
- Service Stand must be used with the Maintenance Strut when working under the lift. (i.e. more than cleaning or visually inspecting)
- Install Maintenance Strut and secondary Service Stand only when the unit is sufficiently raised.
- Do not stand in the pathway of the dock lift during the disengagement process in case the dock falls unexpectedly.

**CAUTION**

- It is recommended that a retrieval tool be used when retrieving or replacing the Maintenance Strut from its stored position.
- It is recommended that this procedure be performed with assistance.

The dock lift may be equipped with a one (or two) piece Maintenance Strut(s) that must be used, in conjunction with a Service Stand, during under-dock inspections or repairs / maintenance.

Depending on dock lift size and capacity, a second Maintenance Strut may be used. Verify the number of Service Stand(s) required before attempting to secure the deck.

1. When all work is completed and the area around the lift is cleared, an authorized person shall inform all affected personnel before removing the lock out and tag out from the electrical connections to the lift hydraulic Powerpack.
2. Press the **UP** push button to gently raise the lift off of the Maintenance Strut.
3. Follow the procedure to disengage the Maintenance Strut then leave it in the stored position. Use an extension tool (i.e. broom handle or wood) to move the Maintenance Strut. As much as possible, never reach in with a body part to move the Maintenance Strut.
4. Examine the Maintenance Strut for damage or if it is missing. Contact your Blue Giant Dealer for service or repair, as required.
5. Remove the Service Stand from the lift then inspect Service Stand for any damage.
6. Press the **DOWN** push button to lower the lift to ground or lowest height position then release the button.

# 10.0 MAINTENANCE

Develop a planned or scheduled maintenance plan to keep the dock lift in good operating order.

**DANGER**

- Failure to properly secure the dock lift deck prior to working underneath it may result in bodily injury, or death.
- Engage the Maintenance Strut AND Service Stand before working. If both cannot be successfully engaged, contact your Blue Giant Dealer.

**WARNING**

- Do not attempt to install, make repairs, or adjustments. Only a trained and authorized service technician should perform the installation process, make repairs, or make adjustments. Contact your Blue Giant Dealer for assistance.
- Do not service this equipment until you have read and understood all of the safety information and instructions contained herein. Failure to adhere to recommended safety practices in this manual and on the dock lift equipment warning labels could result in death or serious injury.
- Do not conduct maintenance or repairs until adequate barriers have been placed to keep warehouse and vehicle traffic away from the work area.
- Before doing any electrical work, verify that the power is disconnected and properly tagged or locked out.
- When conducting maintenance, use only Blue Giant approved lubricants. Improper lubrication or adjustments may cause operational problems.

## 10.1 PLANNED MAINTENANCE PROGRAM (PMP)

In addition to the Daily Maintenance Procedures (DMP), the manufacturer recommends (and local government regulations may require) that a Planned Maintenance Program (PMP) and safety inspection program be performed by a trained and authorized service technician on a regular basis to ensure the equipment is in safe operating condition. The PMP will provide an opportunity to make a thorough inspection of the safety and operating condition of the dock lift. Necessary adjustments and repairs can be done during the PMP, which will increase the life of components and reduce unscheduled downtime.

Recommended procedures for a periodic planned maintenance program that covers inspections, operational checks, cleaning, lubrication, and minor adjustments are outlined in the Owner's Manual for this product. Contact your Blue Giant Dealer regarding for assistance with a planned maintenance program by offering trained service personnel with expertise in dock lift maintenance requirements.

## 10.2 OPERATOR DAILY INSPECTION

The dock lift shall always be examined by the operator **PRIOR TO ANY USE** to verify that it is safe to operate.

The manufacturer recommends scanning to storage or making multiple photocopies of the DMP Checklist. The operator should fill out this form to keep a daily record of operation and maintenance issues. See "10.7 DAILY MAINTENANCE PROCEDURES (DMP) CHECKLIST" on page 25.

## 10.3 ROUTINE SERVICING AND MAINTENANCE

Regular maintenance and care of the dock lift is very important for operator safety, operation efficiency and cost. A faulty dock lift is a potential source of danger to the operator, and to other personnel working near it. As with all quality equipment, keep the dock lift in good operating condition by following the recommended schedule of maintenance. Failure to properly maintain or operate the dock lift within its rated load classification can void the manufacturer warranty.

## 10.4 PLANNED MAINTENANCE PROGRAM INTERVALS

Arrange for a qualified dock lift repair technician to perform regularly scheduled planned maintenance on your dock lift every three months for single shift operations or monthly for multi-shift operations. Call your authorized manufacturer / dealer for further details.

## 10.5 MAINTENANCE SEQUENCE

Follow this procedure for maintenance of the lift.

1. Cleaning, including under lift and/or in pit area.
2. Visual inspection of all components.

3. Lubrication, as required (by a trained service technician only).
4. Test operate all functions.
5. Adjustments, if required (by a trained service technician only).
6. If installed, check for missing or damaged dock bumpers.
7. Record inspection details and findings for owners' files.

## 10.6 CHECKING ROLLERS / BEARINGS

Each set of rollers and bearings needs to be inspected. This procedure requires at least two persons (one service technician plus one other person) to perform and a 5 foot crowbar.

**DANGER**

- Failure to properly secure the dock lift deck prior to working underneath it may result in bodily injury, or death.
- Engage the Maintenance Strut AND Service Stand before working. If both cannot be successfully engaged, contact your Blue Giant Dealer.

**WARNING**

- Do not attempt to install, make repairs or adjustments. Only a trained and authorized service technician should perform the installation process. Contact your Blue Giant Dealer.
- Do not service this equipment until you have read and understood all of the safety information and instructions contained herein. Failure to adhere to recommended safety practices in this manual and on the dock equipment warning labels could result in death or serious injury.
- Do not conduct maintenance or repairs until adequate barriers have been placed to keep warehouse and vehicle traffic away from the work area.
- Before doing any electrical work, verify that the power is disconnected and properly tagged or locked out.
- When conducting maintenance, use only Blue Giant approved lubricants. Improper lubrication or adjustments may cause operational problems.

1. Without a load on the lift deck, raise the dock lift to sufficient height to deploy the Maintenance Strut.
2. Deploy the Maintenance Strut. See "7.1 ENGAGING THE DOCK LIFT MAINTENANCE STRUT" on page 21.
3. Deploy the Service Stand to brace the lower frame and the lift deck edge. See "7.3 ENGAGING THE DOCK LIFT SERVICE STAND" on page 25.
4. With the dock lift secure, use the 5 foot crowbar to manually pry up the lower cross beam nearest to the roller bearing to be inspected.
5. The service technician will inspect the rollers / bearings and verify that it spins freely and smoothly. If not, replace the rollers / bearings as required.
6. Lower the rollers / bearings.
7. With the dock lift secure, use the 5 foot crowbar to manually pry down the upper cross beam nearest to the roller bearing to be inspected.
8. Inspect the upper rollers / bearings and verify that it spins freely and smoothly. If not, replace the rollers / bearings as required.
9. When the inspection is complete. Follow the procedures to disengage the Service Stand then the Maintenance Strut. See "7.4 DISENGAGING THE DOCK LIFT SERVICE STAND" on page 26 and "7.2 DISENGAGING THE DOCK LIFT MAINTENANCE STRUT" on page 24.

## 10.7 DAILY MAINTENANCE PROCEDURES (DMP) CHECKLIST

Use checklist to aid the daily maintenance inspection.

**⚠ DANGER**

- When repairing or conducting maintenance procedures on electrical components, perform lockout / tagout steps according to OSHA regulations and approved electrical codes.
- Prior to inspection, place adequate barriers to reduce unauthorized personnel and vehicle traffic from entering the work area.

**⚠ CAUTION**

- All repairs and maintenance work are to be conducted by trained and authorized personnel ONLY.

Forward this checklist to the person responsible for dock equipment maintenance. See “Owner’s Purchase Record” for Date in Service.

**INSTRUCTIONS:** Indicate “OK for USE” with a check mark ✔ in the appropriate box of each inspection point. Indicate “NOT OK for USE” with an x in the appropriate box of each inspection point.

**EVERY DAY (MAY BE PERFORMED BY OWNER OR ATTENDANT):**

- ☐ Remove any debris that may have accumulated around the dock equipment and sweep any debris out of the lip hinge (if equipped).
- ☐ Verify complication-free operation of the dock equipment and the interior and exterior lights system (if installed).
- ☐ Verify that outside signage is present and legible (if equipped).
- ☐ Remove any potential trip hazards from around the dock area.
- ☐ Verify that dock bumpers/risers/extensions are in working condition (if equipped).
- ☐ Check curb angles for irregularities (e.g. concrete cracks).
- ☐ Verify that the overhead door is functioning correctly (if equipped).
- ☐ Verify that instructional caution and danger labels are present and legible on the product. Replace if necessary.
- ☐ Verify that vehicle restraint or wheel chocks at minimum are present and in working condition.
- ☐ Verify that lip chain(s) and personnel restraint chains (2 per opening) are present and that the hooks or clasps are not damaged.
- ☐ Verify that the bolted guardrails and posts are not damaged or missing. Inspect for damaged mid-rails or bottom kick plates.
- ☐ Verify that the push button station is not damaged and electrical cord is not frayed or has exposed wires.
- ☐ Verify if the hydraulic system has any leaks (oil drops/pooling), loose fittings, or cracked/rotted/sliced hoses.
- ☐ Verify if the dock lift has developed a tilt, any visible damage, or produces unusual noises while moving.
- ☐ Verify complication free operation of the equipment through a complete cycle (refer to Operation Placard).
- ☐ _____
- ☐ _____

**PRINT, SCAN TO STORAGE, OR PHOTOCOPY THIS CHECKLIST AND FILL OUT REGULARLY FOR YOUR RECORDS.**

Explain faults briefly in the space provided below:

_____

_____

_____

_____

_____

_____

_____

_____

_____

BLUE GIANT®
BLUE GIANT EQUIPMENT CORPORATION

DEALER: _____

## PLANNED MAINTENANCE PROGRAM - PMP CHECKLIST

DOCK LIFTS

| | | | | |
|---|---|---|---|---|
| **Customer:** | | **SWO#** | | |
| **Location:** | | **Date:** | | |
| **Contact:** | **Telephone:** | **Inspected By:** | | |
| **Signature:** | **Model / Serial #:** | **Voltage:** | **Phase:** | **HP:** |

WARNING

| **NOTE TO TECHNICIAN:** ALL ITEMS ON LIST **MUST** BE VERIFIED AND CHECKED. ITEMS WITH AN * REQUIRE LUBRICATION. | **Dock / Door #** | **Dock / Door #** | **Dock / Door #** | **Dock / Door #** | **Dock / Door #** |
|---|---|---|---|---|---|
| | ✔ | ✔ | ✔ | ✔ | ✔ |
| Barricade area | | | | | |
| Disconnect power per OSHA requirements | | | | | |
| Clean debris from in and around dock lift | | | | | |

| Mark the following with one of the following: ✔ = GOOD ✕ = COMMENTS / REQUIRES REPAIR | **Dock / Door #** | | **Dock / Door #** | | **Dock / Door #** | | **Dock / Door #** | | **Dock / Door #** | |
|---|---|---|---|---|---|---|---|---|---|---|
| | ✔ | ✕ | ✔ | ✕ | ✔ | ✕ | ✔ | ✕ | ✔ | ✕ |
| Driver warning sign | | | | | | | | | | |
| Pit or mount area | | | | | | | | | | |
| Deck hinges * (If present) | | | | | | | | | | |
| Lip hinge * (If present) | | | | | | | | | | |
| Drain (If equipped) | | | | | | | | | | |
| Guard rails / pockets / mounts (If equipped) | | | | | | | | | | |
| Control / motion beacon / audible warnings (If equip.) | | | | | | | | | | |
| Wire harness / cables | | | | | | | | | | |
| Hydraulic hose assembly | | | | | | | | | | |
| Cylinder | | | | | | | | | | |
| Structural damage | | | | | | | | | | |
| Safety trip bars (If present) | | | | | | | | | | |
| Electrical connectors | | | | | | | | | | |
| Lowering speed flow control (If present) | | | | | | | | | | |
| Chains | | | | | | | | | | |
| Leg rollers | | | | | | | | | | |
| Scissor pin bushings * | | | | | | | | | | |
| Maintenance Stand | | | | | | | | | | |
| Dock bumpers | | | | | | | | | | |
| Check that operational placard present and legible | | | | | | | | | | |
| Complete operating cycle by checking lights for proper sequence, both inside and outside if so equipped | | | | | | | | | | |

| **Unit Certified for Maximum Lift Capacity** | **Dock / Door #** | **Comments (for items marked with an ✕):** |
|---|---|---|
| | | |
| | | |
| | | |

The noted equipment has been checked, inspected and serviced by a trained technician.

## 10.8 LUBRICATION POINTS AND POWERPACK RESERVOIR LEVEL

Only trained technicians should lubricate the lift and fill the Powerpack reservoir. Contact your Blue Giant Dealer regarding oil options.

**WARNING**

- Do not attempt to install, make repairs, or adjustments. Only a trained and authorized service technician should perform the installation process. Contact your Blue Giant Dealer.
- Do not service this equipment until you have read and understood all of the safety information and instructions contained herein. Failure to adhere to recommended safety practices in this manual and on the dock equipment warning labels could result in death or serious injury.
- Do not conduct maintenance or repairs until adequate barriers have been placed to keep warehouse and vehicle traffic away from the work area.
- Before doing any electrical work, make certain the power is disconnected and properly tagged or locked out, in accordance with OSHA regulations and approved electrical codes.
- When conducting maintenance, use only Blue Giant approved lubricants. Improper lubrication or adjustments may cause operational problems.

Apply lubricate at these points and on the matching pivot points on other side.

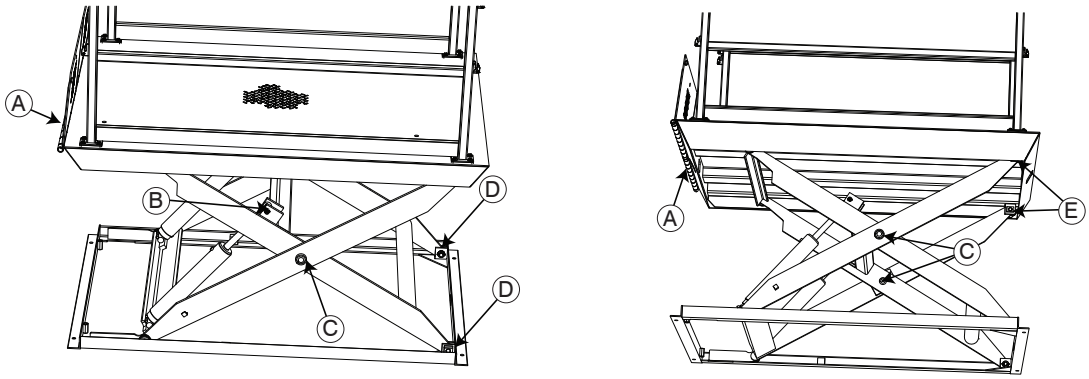


| Callouts | Description |
|---|---|
| A | Lip Hinge |
| B | Lift Cylinder Pivots |
| C | Center Scissor Pivots |
| D | Frame / Leg Pivots |
| E | Deck / Leg Pivots |

1. Without a load on the lift deck, raise the dock lift to sufficient height to deploy the Maintenance Strut.
2. Deploy the Maintenance Strut. See “7.1 ENGAGING THE DOCK LIFT MAINTENANCE STRUT” on page 21.
3. Deploy the Service Stand to brace the lower frame and the lift deck edge. See “7.3 ENGAGING THE DOCK LIFT SERVICE STAND” on page 25.
4. Apply lubrication at the points shown in the illustration.

   **NOTE:** It is recommended to use an oil can with an extended nozzle.
5. Inspect and top up Powerpack reservoir,
   - If Powerpack is self-contained, inspect and fill the reservoir as required while dock lift has the Maintenance Strut and the Service Stand deployed. Do not overfill because overflow may occur when the deck is lowered.
   - If Powerpack is a remote model, inspect and fill reservoir while dock lift is in the lowered position.
6. When the inspection is complete. Follow the procedures to disengage the Service Stand then the Maintenance Strut. See “7.4 DISENGAGING THE DOCK LIFT SERVICE STAND” on page 26 and “7.2 DISENGAGING THE DOCK LIFT MAINTENANCE STRUT” on page 24.

# 11.0 OPERATING INSTRUCTIONS

Follow the safe operating instructions to ensure personnel, load, and equipment safety.

## 11.1 LOAD TRANSFER

When transferring loads onto and off of a dock lift, the transfer vehicle and cargo weight distribution should **NEVER** exceed the maximum single axle load value on the weight rating decal. The dock lift weight rating decal lists the maximum single axle load values for travel along the length or width of the table. When transferring along the width of deck, always keep the weight evenly distributed on the deck section between the scissor legs (along Callout B).

**NOTE:** Illustration simplified for clarity; never operate unit without guard rails, lip(s) and all chains setup in full restraint positions.

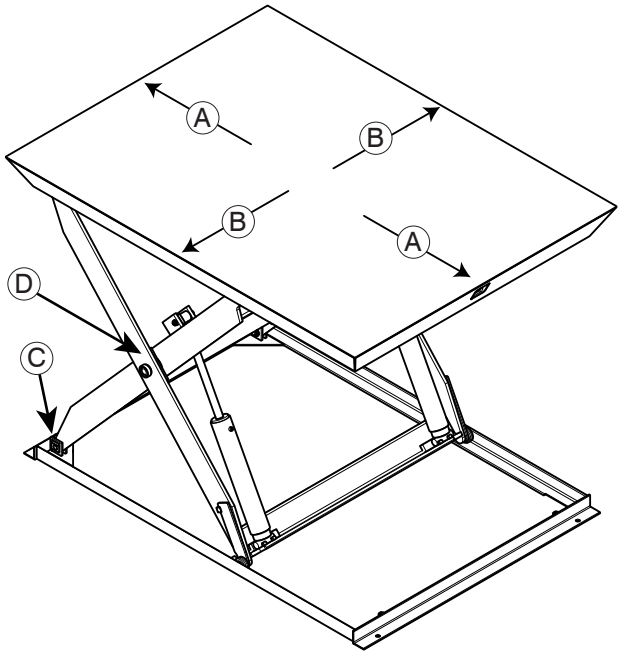


| Callouts | Description |
|---|---|
| A | Transfer route along the length of the deck. See weight rating decal for specific loads. |
| B | Transfer route along the width of the deck and always on the deck section between the scissor legs. See weight capacity decal for specific loads. |
| C | Side C. |
| D | Location of nameplate decal with load transfer capacity. |

## 11.2 RAISING LIFT

This section describes the process for raising the lift. See “8.1 PUSH BUTTON CONTROLS” on page 15 for detailed instructions regarding dock lift controls.

**⚠ DANGER**

- While lift is moving, keep people and objects clear of areas under the platform and in the immediate lift area.
- Fully read and understand the lift operation. Practice safe load transfer methods. If you do NOT understand the complete lift operating procedure and safe load transfer methods (i.e. safe braking during transfer), refer to the Owner/Operator regarding local regulatory/jurisdictional and facility requirements.
- While transferring load across lip to truck bed or finished floor, be aware of potential fall risks from table and lip edges.

**⚠ WARNING**

- Lift operator(s) must be present during all steps of this procedure.
- Lift operator(s) must keep an unobstructed view of lift, any operation light/horn/bell, and other operators to ensure safe operation.
- Only one (1) rider/operator is permitted on the deck when lift is in motion.
- Do not exceed (rated/lifting) capacity or load classification of lift as listed on the manufacturer/product nameplate. Capacity includes: forklift/manual equipment, pallet(s), material(s)/goods, operator, and any other objects on the deck/platform. See “4.4 OWNER’S RESPONSIBILITY” on page 8. For nameplate location, see “12.0 DECAL IDENTIFICATION AND LOCATION” on page 38.
- To avoid bodily injury, stand clear of lift while it is moving.
- Do not stand on, manually force, or apply weight to hinged lip unless it is supported by the ground or by a 4 in. (100 mm) minimum overlap with trailer bed.
- Never attempt to stand or apply weight to hinged lip if supported solely by lip chains.
- Hinged lips may drop unexpectedly, keep people and objects clear of the area immediately under or near the lip.
- All hinged lips must be in the raised position and chained to an on deck guardrail or post while the dock lift is in motion.
- All personnel restraint chains must be engaged, on the guard rail hooks, across any open sections of the deck while the dock lift is in motion.

Read and understand these instructions and safety rules before operating lift:

- Before using lift, inspect it for proper operation and condition. If any unsafe condition exists, remove unit from service until repairs are made.
- Before using lift, inspect all safety devices (such as guard rails, personnel restraint chains, and toe guards) to verify that they are in place and functioning properly.
- Prior to placing a load on dock lift, read and understand the rated capacity of the unit, as labeled on the nameplate attached to the side of the deck assembly. The rated lift capacity is the maximum uniformly distributed load permitted for the unit. The unit capacity is down rated for rolling loads or loads concentrated on the lift end(s) or side(s). The down rated capacities are labeled on the nameplate.

1. Verify that the lift is readied for use. For example, the electrical power is **ON** to the Powerpack and the lift is in the lowered position without a lockout/tagout.
2. Verify that the trailer is properly aligned to lift, restrained or chocked, and the trailer door is open.
3. If present, verify that any entry (or building) side lip is unchained and manually lowered to the ground.

| Callout | Description |
|---|---|
| A | Unhook lip chain on entry or building side. |

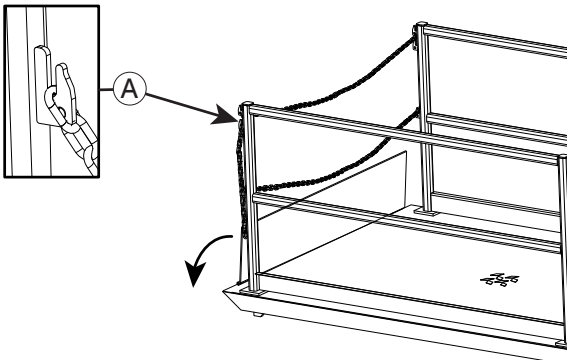


4. Verify that any exit (or trailer) side lip is chained and raised.

| Callout | Description |
|---|---|
| A | Hook lip chain on exit or trailer side. |

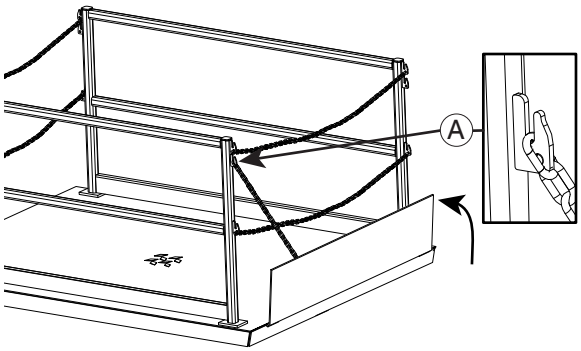

5. Remove entry (or building) side personnel restraint chains.
   If present, do the same for any interlock door or gate.

| Callout | Description |
|---|---|
| A | Unhook personnel restraint chains on the entry or building side. |

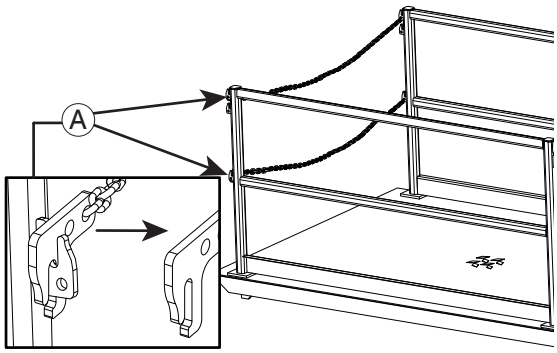


6. If job required, drive forklift or transfer device onto the deck of the lift.

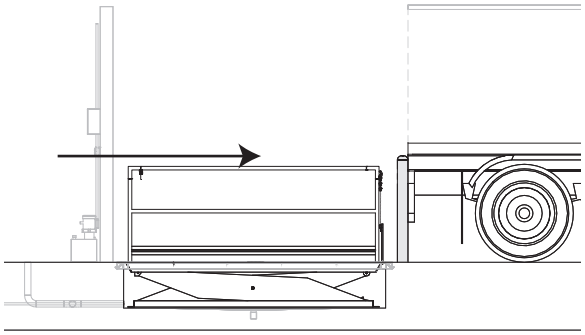

7. Verify that the load is positioned on the deck between where the scissor legs will be in the raised position AND in the lateral (left/right) center of the deck. The center of gravity of the load must be between the two scissor legs otherwise deck tipping may occur during raising of the lift.

   **NOTE:** Illustration simplified for clarity; never operate unit without guard rails, lip(s) and all chains setup in full restraint positions.

| Callout | Description |
|---|---|
| A | Center of gravity of load shall be on this deck section, between the scissor legs, during the lift raising. |
| B | Center of gravity of load shall never be on this deck section, outside of the scissor legs, during lift raising. |
| C | Center of gravity of load should be laterally (L/R) centered on the deck. |

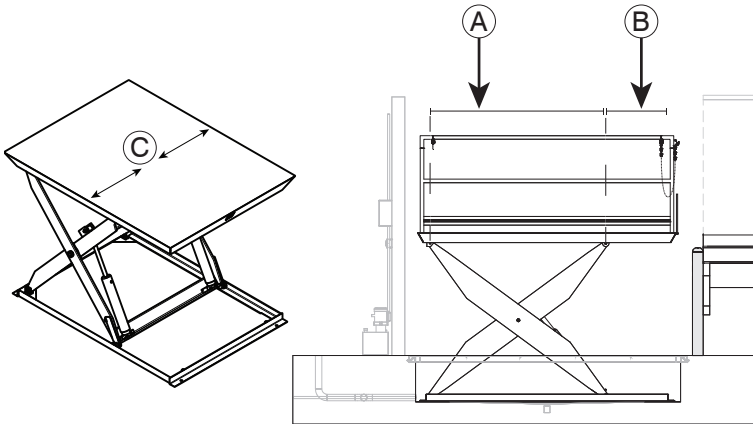


8. If job required, park forklift or transfer device. Apply brakes or block transfer device/cart, and lower any load carried.
9. Reattach the entry (or building) side personnel restraint chains.
   If present, do the same for any interlock door or gate on the entry side.

| Callout | Description |
|---|---|
| A | Hook personnel restraint chains, on the entry or building side. |

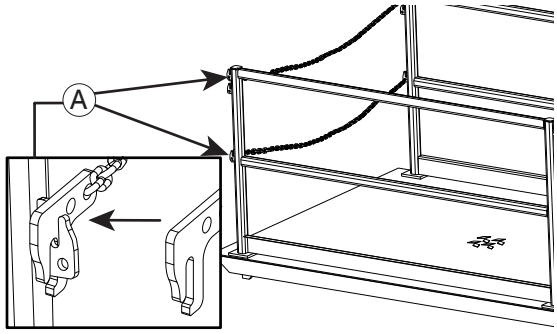

10. If present, verify that any entry (or building) side lip is manually raised and chained, or the hydraulic lip is fully raised and chained.

| Callout | Description |
|---|---|
| A | Hook lip chain on the entry or building side. |

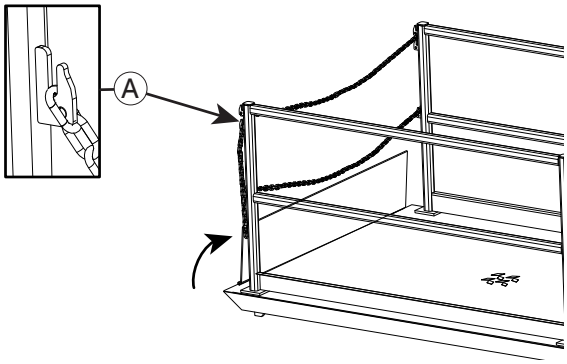


11. On lift control, activate the key interlock (if present) then press and hold the **UP** push button to raise the deck.
If present, any Powerpack mounted bell, acoustic warning, or visual warning beacon will operate while the lift is in motion.

| Callout | Description |
|---|---|
| A | **UP** push button. |

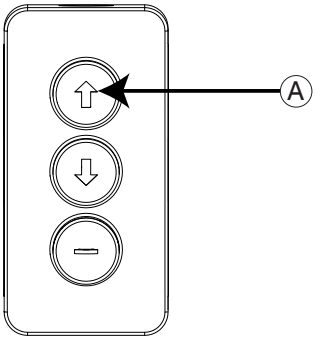


12. When deck is level with or slightly above trailer bed (by one (1) in. (25.4 mm) to two (2) in. (50.8 mm)), release the button. This provides a gentle lip slope that reduces crowning/obstructions or severe gaps.
If present, the rolling stop guard will deploy.

| Callout | Description |
|---|---|
| A | One (1) in. (25.4 mm) to two (2) in. (50.8 mm) gap. |

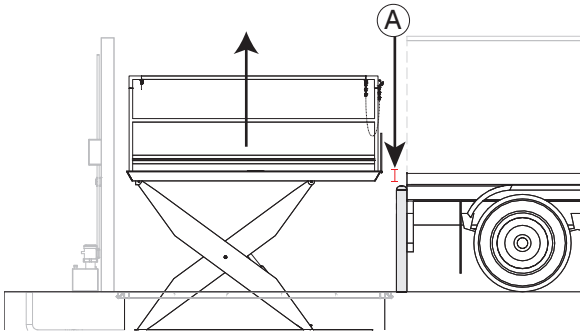


13. On the exit side, unchain and manually lower the lip, or unchain and lower the hydraulic lip onto the trailer bed.

| Callout | Description |
|---|---|
| A | Unhook lip chain on the exit or trailer side. |

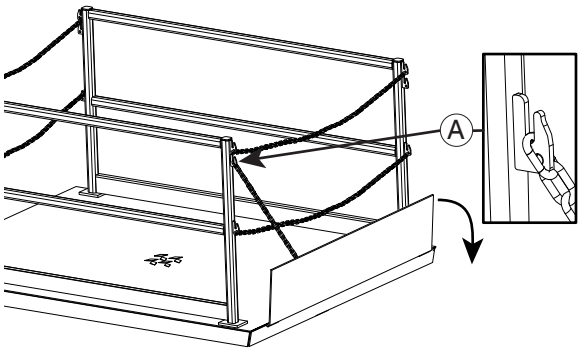

**NOTE:** Verify that the deck lip has a minimum of four (4) in. (102 mm) of overlap with the trailer bed.

| Callout | Description |
|---|---|
| A | Minimum 4 inch (100 mm) overlap. |

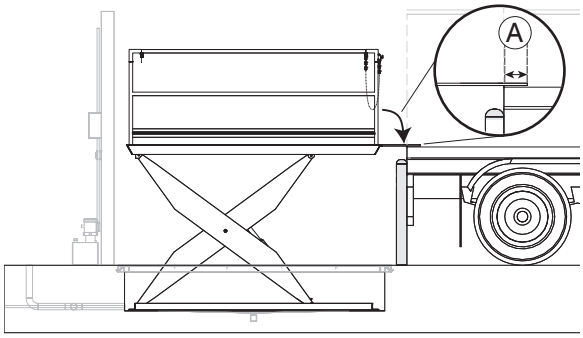


14. Remove exit (or trailer) side personnel restraint chains.
    If present, do the same for any interlock door or gate on the exit side.

| Callout | Description |
|---|---|
| A | Unhook personnel restraint chains on the exit or trailer side. |

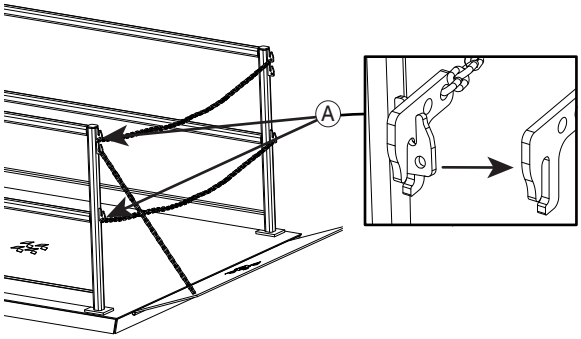


15. If job required, drive forklift or transfer device onto trailer.
16. Transfer load.

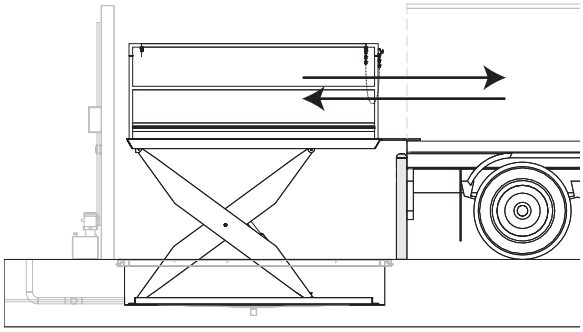

## 11.3 LOWERING LIFT

This section describes the process for lowering the lift. See “8.1 PUSH BUTTON CONTROLS” on page 15 for detailed instructions regarding dock lift controls.

**⚠ DANGER**

- While lift is moving, keep people and objects clear of areas under the platform and in the immediate lift area.
- Fully read and understand the lift operation. Practice safe load transfer methods. If you do NOT understand the complete lift operating procedure and safe load transfer methods (i.e. safe braking during transfer), refer to the Owner/Operator regarding local regulatory/jurisdictional and facility requirements.
- While transferring load across lip to truck bed or finished floor, be aware of potential fall risks from table and lip edges.

**⚠WARNING**

- Lift operator(s) must be present during all steps of this procedure.
- Lift operator(s) must keep an unobstructed view of lift, any operation light/horn/bell, and other operators to ensure safe operation.
- Only one (1) rider/operator is permitted on the deck when lift is in motion.
- Do not exceed (rated/lifting) capacity or load classification of lift as listed on the manufacturer/product nameplate. Capacity includes: forklift/manual equipment, pallet(s), material(s)/goods, operator, and any other objects on the deck/platform. See “4.4 OWNER’S RESPONSIBILITY” on page 8. For nameplate location, see “12.0 DECAL IDENTIFICATION AND LOCATION” on page 38.
- To avoid bodily injury, stand clear of lift while it is moving.
- Do not stand on, manually force, or apply weight to hinged lip unless it is supported by the ground or by a 4 in. (100 mm) minimum overlap with trailer bed.
- Never attempt to stand or apply weight to hinged lip if supported solely by lip chains.
- Hinged lips may drop unexpectedly, keep people and objects clear of the area immediately under or near the lip.
- All hinged lips must be in the raised position and chained to an on deck guardrail or post while the dock lift is in motion.
- All personnel restraint chains must be engaged, on the guard rail hooks, across any open sections of the deck while the dock lift is in motion.

Read and understand these instructions and safety rules before operating lift:

- Before using lift, inspect it for proper operation and condition. If any unsafe condition exists, remove unit from service until repairs are made.
- Before using lift, inspect all safety devices (such as guard rails, personnel restraint chains, and toe guards) to verify that they are in place and functioning properly.
- Prior to placing a load on lift, read and understand the rated capacity of the unit, as labeled on the nameplate attached to the side of the deck assembly. The rated lift capacity is the maximum uniformly distributed load permitted for the unit. The unit capacity is down rated for rolling loads or loads concentrated on the lift end(s) or side(s). The down rated capacities are labeled on the nameplate.

1. Verify that the lift is readied for use. Power is **ON** and the lift is in the raised position without a lockout/tagout.
2. On the exit side, unchain and manually lower the lip, or unchain and lower the hydraulic lip onto the trailer bed.

| Callout | Description |
|---|---|
| A | Unhook lip chain on the exit or trailer side. |

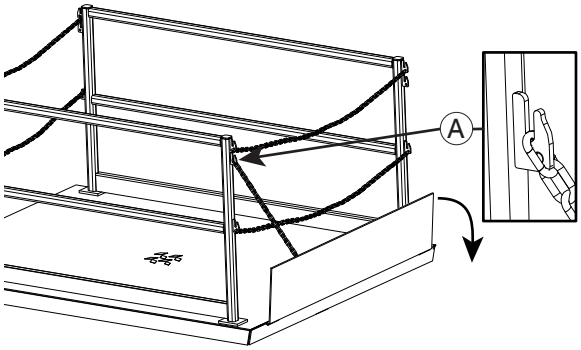


3. Remove the exit (or trailer) side personnel restraint chains.
   If present, do the same for any interlock door or gate on the exit side.

| Callout | Description |
|---|---|
| A | Unhook personnel restraint chains on the exit or trailer side. |

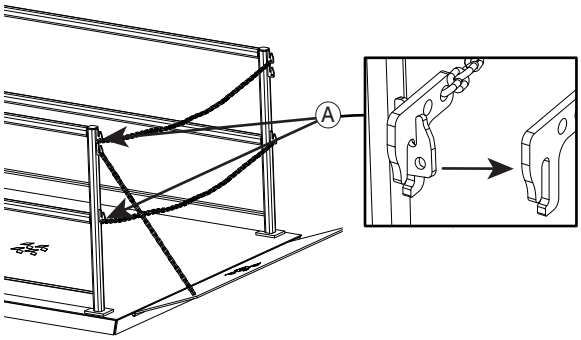


4. If job required, drive forklift or transfer device onto lift deck.

5. Verify that the load is positioned on the deck between the scissor legs in the raised position AND in the lateral (left/right) center of the deck. The center of gravity of the load must be between the two scissor legs otherwise deck tipping may occur during the lowering of the lift.

   **NOTE:** Illustration simplified for clarity; never operate unit without guard rails, lip(s) and all chains setup in full restraint positions.

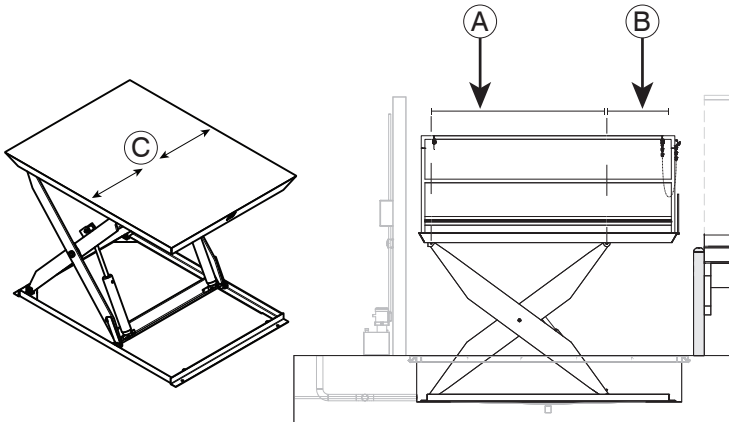


| Callout | Description |
|---|---|
| A | Center of gravity of load shall be on this deck section, between the scissor legs, during the lift lowering. |
| B | Center of gravity of load shall never be on this deck section, outside of the scissor legs, during the lift lowering. |
| C | Center of gravity of load should be laterally (L/R) centered on the deck. |

6. If job required, park forklift or transfer device. Apply brakes or block transfer device/cart, and lower any load carried.
7. Reattach exit (or trailer) side personnel restraint chains.
   If present, do the same for any interlock door or gate on the exit side.

| Callout | Description |
|---|---|
| A | Hook personnel restraint chains on the exit or trailer side. |

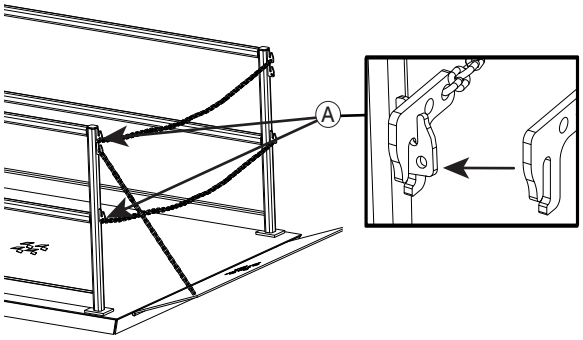


8. Manually raise the deck lip or raise the hydraulic lip then reattach the lip chain.

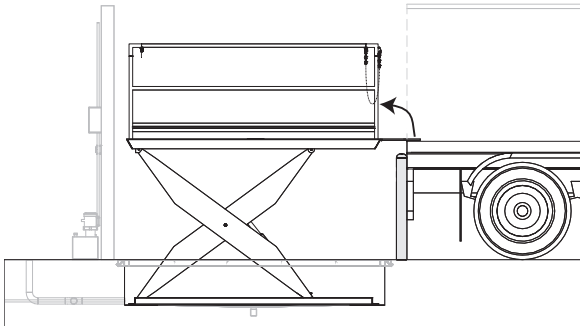

| Callout | Description |
|---|---|
| A | Hook lip chain on the exit or trailer side. |

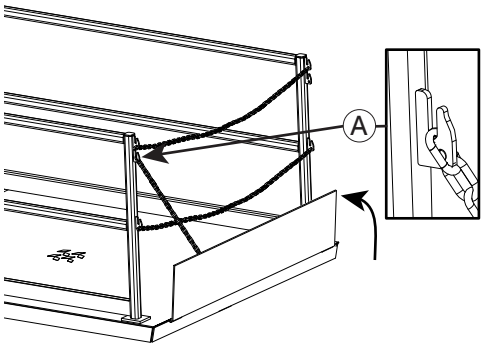

9. On lift control, activate the key interlock (if present) then press and hold the **DOWN** push button to lower the deck.
   If present, any Powerpack mounted bell, acoustic warning, or visual warning beacon will operate while the lift is in motion.

| Callout | Description |
|---|---|
| A | **DOWN** push button |

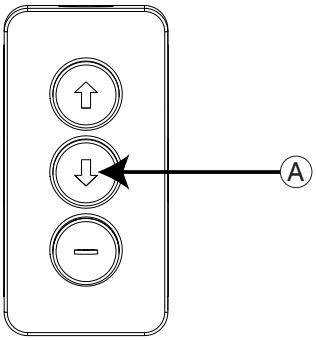


10. When deck is level with the building side floor or stops lowering, release the button.
    If present, the rolling stop guard will retract.

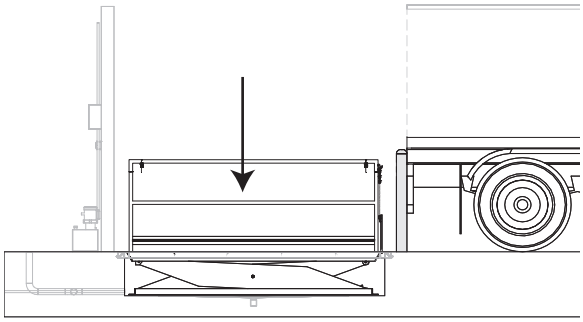

**OPTIONS**

To transfer from the deck to driveway level using a lip, the deck must be set at the correct height depending on the installation type:

- **Pit Mount with recessed lip**: lower the deck until it is flush with the floor, as the lip fits into the lip recess cut then release button.
- **Pit Mount without recessed lip** or **Surface Mount**: When deck is slightly above the driveway (by one (1) (25.4 mm) to two (2) in. (50.8 mm)) then release the button. This provides a gentle lip slope that reduces crowning/obstructions or severe gaps.

11. If present, verify that any entry (or building) side lip is unchained and manually lowered to the ground.

| Callout | Description |
|---|---|
| A | Unhook lip chain on the entry or building side. |

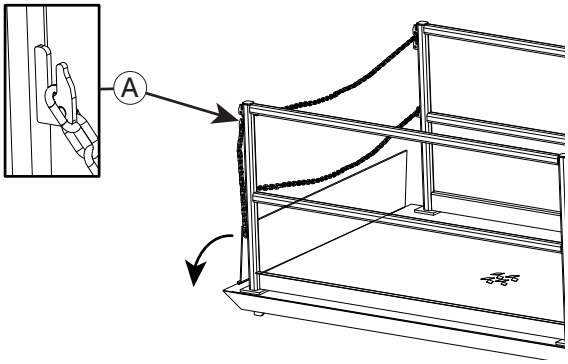


12. Remove entry (or building) side personnel restraint chains.
    If present, do the same for any interlock door or gate on the entry side.

| Callout | Description |
|---|---|
| A | Unhook personnel restraint chains on the entry or building side. |

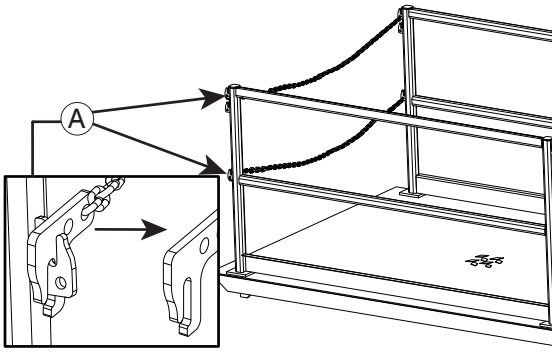

13. If job required, drive forklift or transfer device off of lift deck.

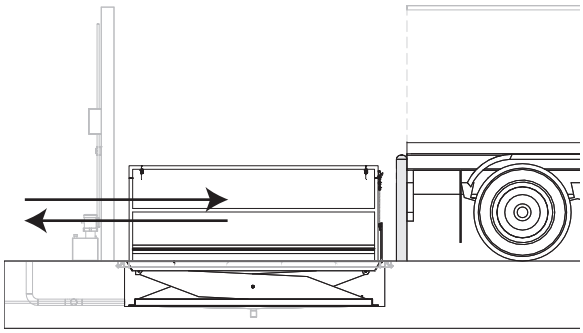

14. If transfer complete, reattach entry (or building) side personnel restraint chains. If present, do the same for any interlock door or gate on the exit side.

| Callout | Description |
|---|---|
| A | Hook personnel restraint chains on the entry or building side. |

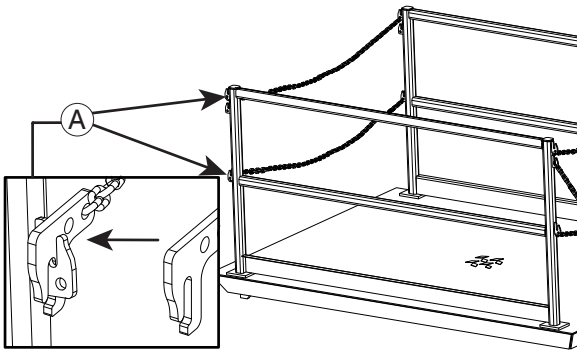

# 12.0 DECAL IDENTIFICATION AND LOCATION

These labels inform operators and personnel about hazardous areas on and around the dock lift.

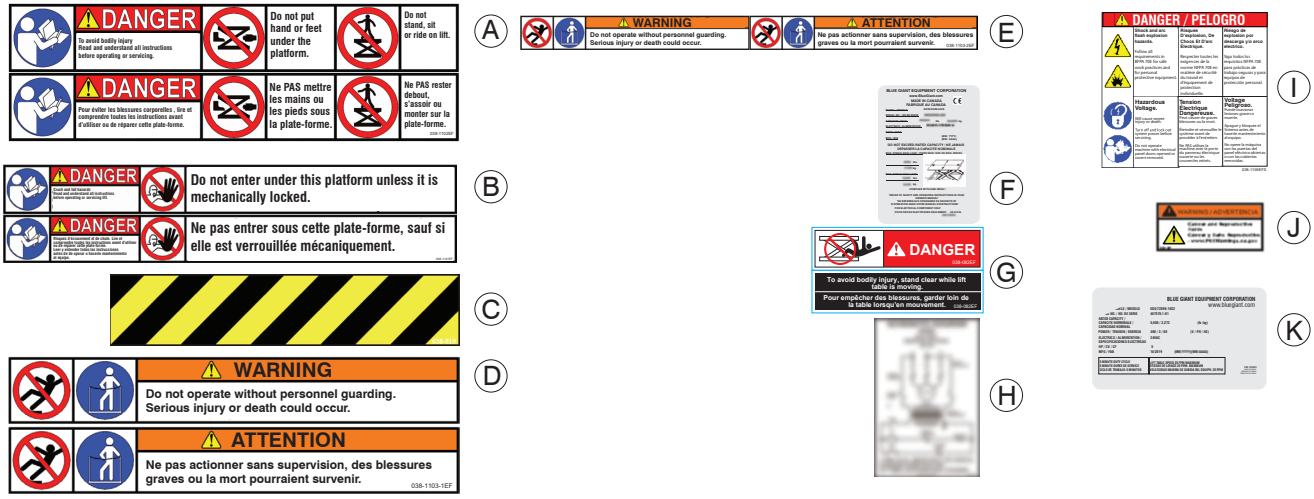


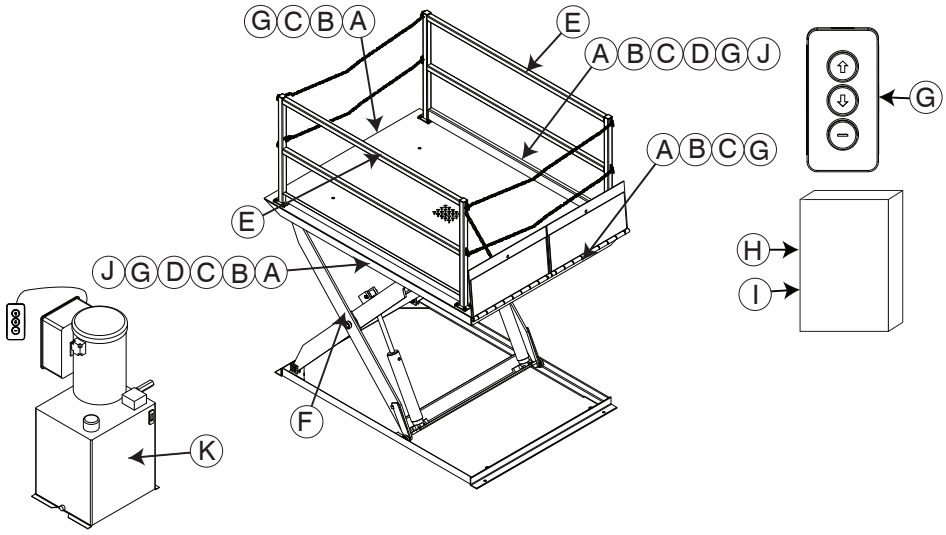


| Callout | Qty | Part No. | | Description |
|---|---|---|---|---|
| A | 4 | 038-1102 | EF<br>ES | Warns personnel to read operating instructions before using the lift table and warn of possible bodily injury |
| B | 4 | 038-1101 | EF<br>ES | Warns personnel to employ the Maintenance Strut and Service Stand before working on and under the lift table |
| C | 4 | 038-237 | | Safety Stripe tape to alert personnel of hazardous areas and edges (i.e. toe guards, edges) |
| D | 2 | 038-1103 | 1EF<br>1ES | Warns personnel to use the original guard rails and other safety features when operating the lift. (i.e. Interlock gate)<br>(Located on the deck sides) |
| E | 1 per guardrail | 038-1103 | 2EF<br>2ES | Warns personnel to use the original guard rails and other safety features when operating the lift. (i.e. Interlock gate) (Located on the original guard rails) |
| F | 2 | 038-1106EFS | | Nameplate to identify the lift, serial number, and load transfer capacities |
| G | 5 | 038-082 | EF<br>ES | Warns personnel to stand clear of lift table and the immediate area while it is in operation. Each decal has an image half and a text half. Each half may be applied horizontally (side to side) along the table edge or vertically (one above another) along the table edge, depending on space available. |
| H | 1 | 114-308 | | Wiring diagram for facility hookup (Keep in electrical box) (Sample only shown) |

| Callout | Qty | Part No. | Description |
|---|---|---|---|
| I | 1 | 038-1105EFS | Reminds personnel to lock out the electrical feeds before attempting work on the lift (on exterior of electrical box) |
| J | 2 | 038-1097ES | Proposition 65 Cancer and Reproductive Harm Warning - California only |
| K | 1 | 038-1107EFS | Rated dock capacity and electrics (Located on Powerpack) |

## 12.1 OPERATION PLACARD

The Operation Placard (Part. No. 038-545E) is to be wall mounted near the dock lift controls. A duplicate is provided on the following page.

# ⚠ WARNING

## APPLIES TO BLUE GIANT SCISSOR LIFTS

Do not operate this scissor lift without proper training and authorization.

**READ AND UNDERSTAND THE FOLLOWING:**
*The instructions and warnings on this placard and in the owner's manual.*
*The warnings on the scissor lift decals.*

Do NOT go under the scissor lift platform to clean or perform routine maintenance unless the Maintenance Strut and Service Stand are safely and securely engaged.

**Prior to using the scissor lift:**
• *Verify that all safety devices (guard rails, restraint chains, toe guards, and warning bells-if equipped) are in place and functioning properly.*

• *Operate the scissor lift through one complete lift / lower cycle and verify its proper operation. Inspect the scissor lift for signs of structural damage or mechanical malfunction. If damage is observed or the unit fails to operate properly, remove them from service and notify maintenance personnel immediately.*

Do NOT exceed the capacity as stated on the nameplate.

Ensure that the scissor lift serial nameplate is present and legible.

Do NOT leave the control station where it can be accidently operated or damaged.

Be aware that lift capacity may be reduced when loads are rolled over the platform sides or edges. Refer to the nameplate for reduced capacity under these conditions.

If loads are mobile, secure them in a fixed position before operating the scissor lift.

Lift operator(s) must be present during all steps of operation.

Lift operator(s) must keep an unobstructed view of lift, any operation light/horn/bell, and other operators to ensure safe operation.

Ensure that all personnel near the scissor lift are aware that it is being operated.

Keep objects, control cables, spills, possible trip hazards, and debris away from around or under the scissor lift platform/lip and its travel path.

If the scissor lift is equipped with a hinged bridge(s), the bridge must overlap the trailer bed by a minimum of 4" (102mm) before use. Do not use the bridge if it is supported solely by the lifting chain.
Hinged lips may drop unexpectedly, keep people and objects clear of the area immediately under or near the lip.

**If maintenance or service is required:**
• *Only authorized service personnel shall provide maintenance / service on the lift.*

• *Follow approved lockout procedures.*

• *Do NOT work on or under the lift without properly engaging the lift's maintenance strut. Blue Giant recommends the use of a secondary means (serivce stand) of securing the scissor lift while preforming repairs under the deck.*

• *The lift shall not be modified or altered without written approval from an authorized Blue Giant representative.*

• *Maintain records of repairs and preventive maintenance reports.*

# 13.0 EQUIPMENT COMPONENT ILLUSTRATIONS

This section displays the various hardware components.

## 13.1 COMPONENTS AS SHIPPED CHECKLIST

This section displays the shipped hardware components.

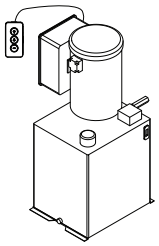

B

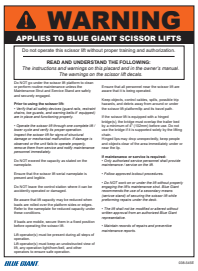


C

D

E F

A

| ✔ | CALLOUT | QTY. | PART NO. | DESCRIPTION | APPROX. WEIGHT | |
|---|---|---|---|---|---|---|
| | A | 1 | Model Dependent | Dock Lift | Varies by Model | |
| | B | 1 | Model Dependent | Remote Powerpack with Push Button Control Pendant | Varies by Model | |
| | C | 1 | 038-545E | Operation/Warning Placard | — | — |
| | D | 1 | 038-1098 | Installation Manual | — | — |
| | E | 1 | 038-1099 | Owner's Manual | — | — |
| | F | 1 | 038-1128EPL | Parts List | — | — |

## 13.2 MECHANICAL ASSEMBLY

This exploded view displays common components of the dock lift.

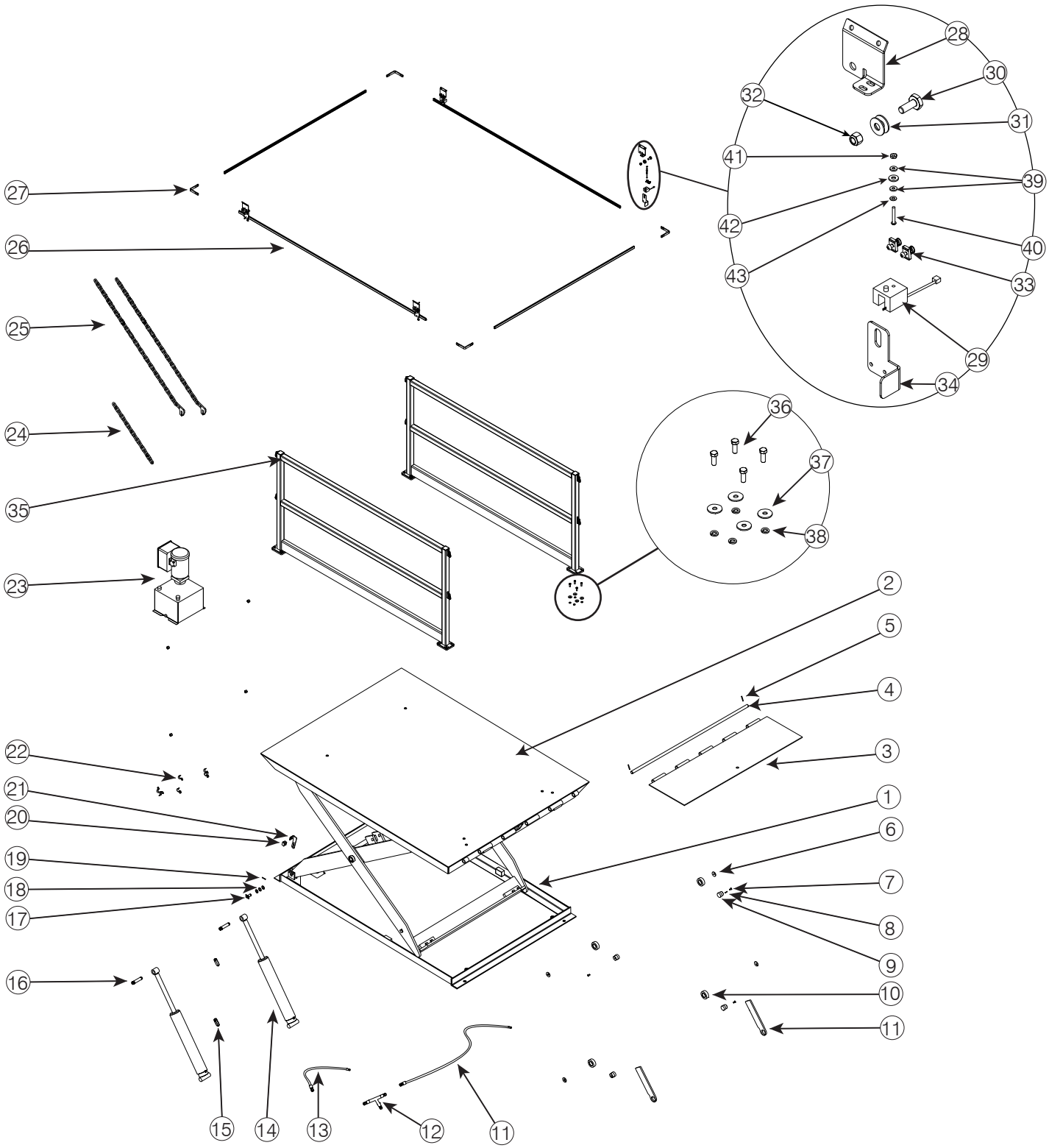

| ITEM | QTY | PART NO. | DESCRIPTION |
|---|---|---|---|
| 1 | 1 | See Owner's Manual (038-1099E) | BACK FRAME WELDMENT |
| 2 | 1 | See Owner's Manual (038-1099E) | DECK WELD |
| 3 | 1 | See Owner's Manual (038-1099E) | LIP PLATE WELDMENT |
| 4 | 1 | Varies on Model | LIP HINGE TUBE |
| 5 | 1 | 013-625 | LIP PIN |
| 6 | 4 | 117-500 | ROLLER STUD PLATE 1-3/4IN OD X 7GA THK |
| 7 | 4 | 011-066 | FHCS 5/16-18 UNC X 3/4"L |
| 8 | 4 | 013-005 | SPRING PIN, 5/32IN OD X 1IN L |
| 9 | 4 | 105-917 | STUD ROLLER 12IN LH & 14IN LH |
| 10 | 4 | 019-001 | BEARING ROLLER ED/FS 6K# & OVER |
| 11 | 1 | Varies on Model | MAIN HOSE FITTING |
| 12 | 1 | Varies on Model | T-FITTING |
| 13 | 1 | Varies on Model | CYLINDER HOSE TO T-FITTING |
| 14 | 2 | Varies on Model | "CYLINDER ASSY (3-1/2""DIA), ED/FS ( 19 1/2"" STROKE)" |
| 15 | 2 | Varies on Model | VELOCITY FUSE |
| 16 | 2 | Varies on Model | PIN, CYLINDER PIVOT, 1IN OD X 5 1/8IN L |
| 17 | 2 | Varies on Model | PIN ASSEMBLY, 3/4IN OD X 1-7/8IN L |
| 18 | 6 | Varies on Model | "WASHER, SPACER,1 ID X 1-3/4 OD X 1/16 THK" |
| 19 | 2 | 013-012 | SPRING PIN Ø1/4" X 2"L ZN PLATED |
| 20 | 1 | 2005415 | VANE SENSOR |
| 21 | 1 | 2009892 | BRACKET, LIMIT SWITCH |
| 22 | 6 | 035-262 | STRAP (#8 HOSE CLAMP),EMT,3/4IN |
| 23 | 1 | Varies on Model | HYDRAULIC POWERPACK |
| 24 | Varies on Model | Varies on Model | LIP CHAIN |
| 25 | Varies on Model | Varies on Model | PERSONNEL RESTRAINT CHAIN(S) |
| 26 | 4 | Varies on Model | ETG STRUT |
| 27 | 4 | 2015215 | CORNER INSERT, ETG |

| ITEM | QTY | PART NO. | DESCRIPTION |
|---|---|---|---|
| 28 | 4 | 2005412 | BRACKET, ELECTRIC TOE GUARD, STYLE 3 |
| 29 | 1 | 026-H136-R | Harness Recept, Interlock Sensor |
| 30 | 4 | 010-039 | SCREW,CAP,HEX HD,3/8-16X1X1,-,PREFERRED |
| 31 | 2 | 012-252 | WASHER,FLAT,3/8,PREFERRED |
| 32 | 4 | 011-552 | NUT,HEX,NYLON,LOCK,3/8-16,PREFERRED |
| 33 | 8 | 011-194 | NUT, STRUT CHANNEL W/ SPRING #8-32 |
| 34 | 4 | 2003550 | GUIDE, ELECTRIC TOE GUARD, 8IN-10IN LH |
| 35 | Varies on Order | Varies on Model | GUARD RAIL |
| 36 | 4 per anchor | 010-039 | SCREW, CAP, HEX HD, 3/8-16X1X1, -, PREFERRED |
| 37 | 4 per anchor | 012-201 | WASHER, LOCK, SPG, REGULAR, 3/8, PREFERRED |
| 38 | 4 per anchor | 012-252 | WASHER,FLAT,3/8,PREFERRED |
| 39 | 2 per anchor | 012-204 | WASHER FLAT # 6 SCREW SIZE |
| 40 | 1 per anchor | 011-003 | SCREW,RD HD,#6-32,PREFERRED |
| 41 | 1 per anchor | 011-514 | NUT HEX MACHINE SCREW # 6-32 |
| 42 | 1 per anchor | 012-206 | WASHER FLAT #10 |
| 43 | 1 per anchor | 012-224 | WASHER, LOCK STEEL ZINC PLATED |

## HYDRAULIC LIP ASSIST MECHANICAL ASSEMBLY

This exploded view displays common components of the dock lift.

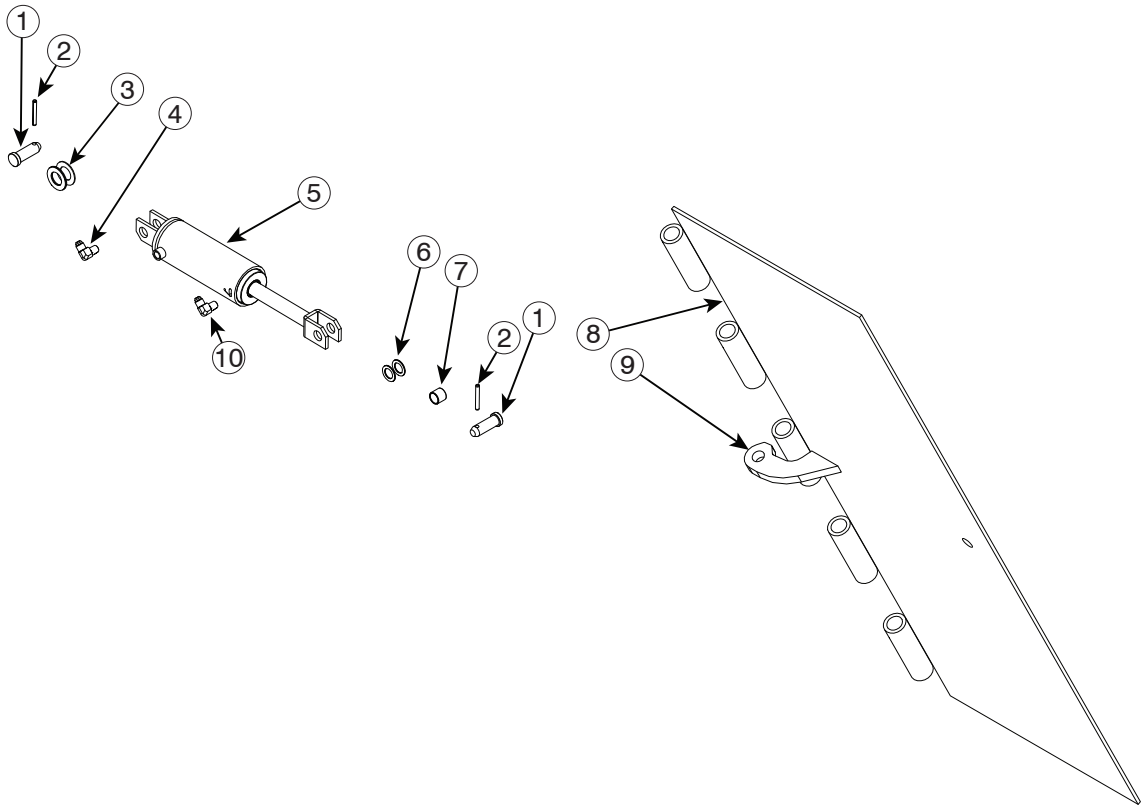


| ITEM | QTY | PART NO. | DESCRIPTION |
|---|---|---|---|
| 1 | 1 | 107-196 | CLEVIS PIN 3/4in OD X 1-5/8in L |
| 2 | 1 | 013-012 | PIN,SPRING,SLOTTED,1/4X2,PREFERRED |
| 3 | 10 | 106-389 | "WASHER, SPACER,1 ID X 1-3/4 OD X 1/16 THK" |
| 4 | 1 | 034-611 | FITTING |
| 5 | 1 | 211-7002-2 | LIP CYLINDER |
| 6 | 4 | 105-878 | SPACER WASHER |
| 7 | 1 | 108-001 | BUSHING 3/4”ID X 7/8”OD X 3/4”L |
| 8 | 1 | Varies on Model | LIP |
| 9 | 1 | 2009716 | LIP CLEVIS |
| 10 | 1 | 034-601 | FITTING |

## SPRING LIP ASSIST MECHANICAL ASSEMBLY

This exploded view displays common components of the dock lift.

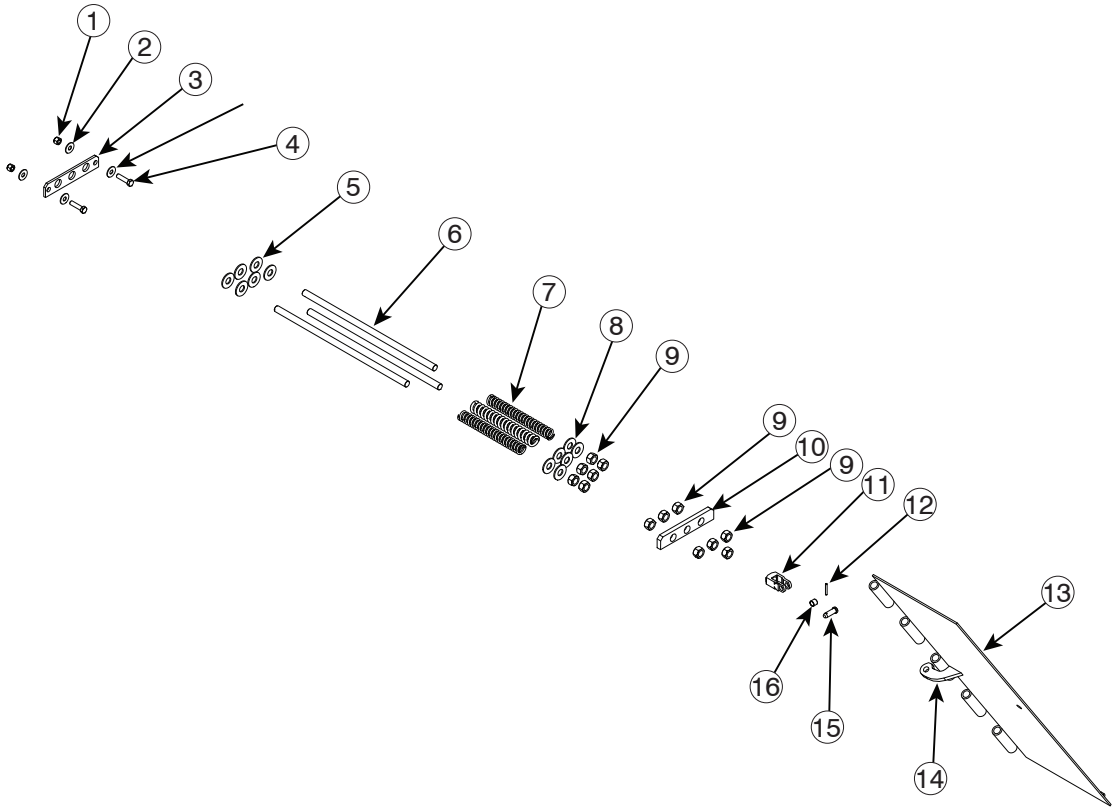


| ITEM | QTY | PART NO. | DESCRIPTION |
|---|---|---|---|
| 1 | 2 | 011-501 | NUT,HEX,NYLON,LOCK,5/8-11,PREFERRED |
| 2 | 4 | 012-213 | WASHER,FLAT,5/8,PREFERRED |
| 3 | 1 | 2002242-01 | PLATE, SPRING ASSIST, 3/4IN THK |
| 4 | 2 | 011-032 | CAPSCREW GR.8 HEX HEAD |
| 5 | 12 | 012-250 | WASHER FLAT USS 1" |
| 6 | 3 | 24-003386-1 | LIP PUSHER SHAFT, 10'L MU |
| 7 | Varies on Model | Varies on Model | COMPRESSION SPRING-LIP ASSIST |
| 8 | 6 | 012-250 | WASHER FLAT USS 1" |
| 9 | 7 | 1002042 | HEX NUTS (U.S.) |
| 10 | 1 | 2002242-02 | PLATE, SPRING ASSIST, 3/8IN THK |
| 11 | 1 | 114-663 | CLEVIS |
| 12 | 1 | 013-012 | SPRING PIN, 1/4IN DIA X 2IN L |
| 13 | 1 | Varies on Model | LIP |
| 14 | 1 | 2009716 | LIP CLEVIS |
| 15 | 1 | 107-196 | CLEVIS PIN 3/4IN OD X 1-5/8IN L |
| 16 | 1 | 018-001 | BUSHING 3/4"ID X 7/8"OD X 3/4"L |

## GATE MECHANICAL ASSEMBLY

This exploded view displays common components of the dock lift.

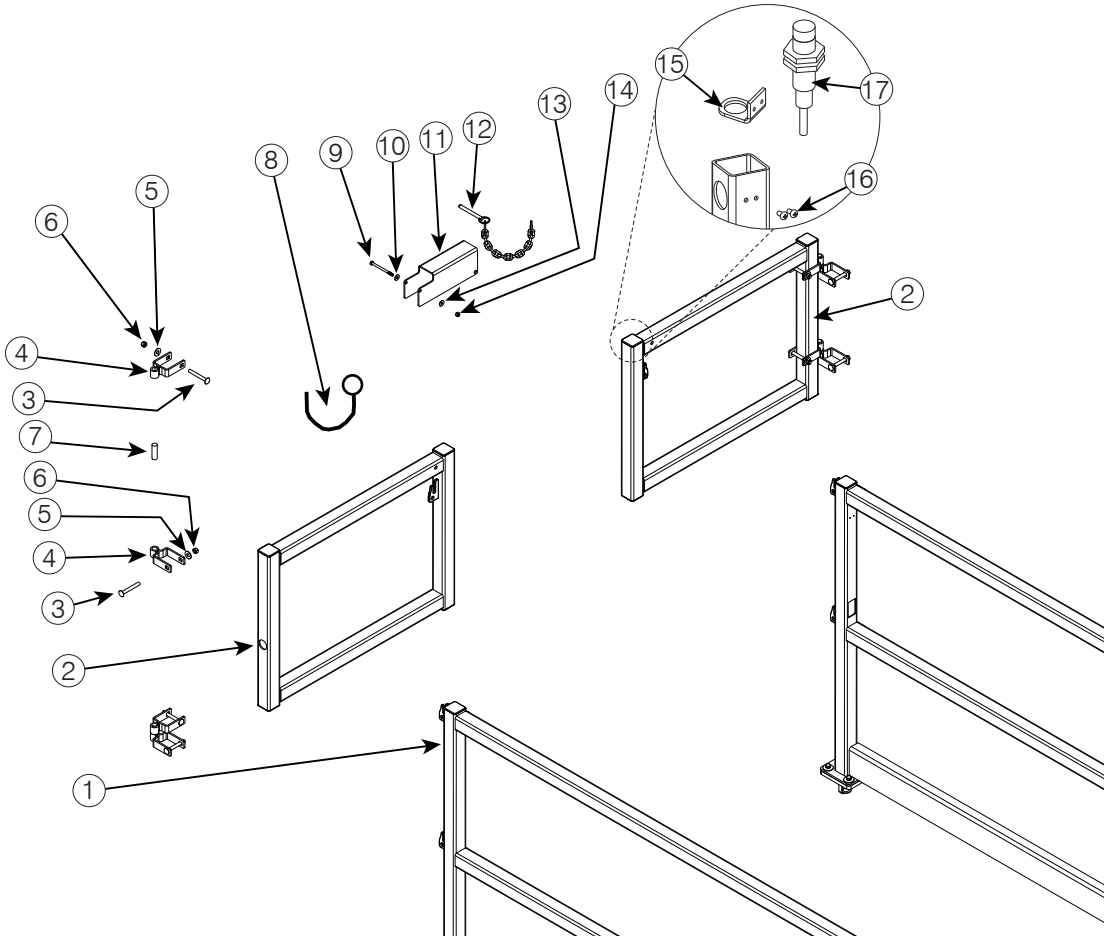


| ITEM | QTY | PART NO. | DESCRIPTION |
|---|---|---|---|
| 1 | Varies on Model | 2002783 | GUARD RAIL |
| 2 | 2 | Varies on Model | GATE |
| 3 | 8 | 014-075 | BOLT,CARRIAGE,3/8-16X3,NP |
| 4 | 4 | 2005978 | BRACKET, SQ. POST 2IN, FEMALE, 9GA |
| 5 | 16 | 012-252 | WASHER,FLAT,3/8,PREFERRED |
| 6 | 8 | 011-507 | NUT,HEX,3/8-16,PREFERRED |
| 7 | 4 | 2012452 | PIVOT PIN 5/8"D X 2"L |
| 8 | 1 | 013-632 | LANYARD, LOOP TO LOOP 12L |
| 9 | 1 | 011-141 | CAPSCREW, HEX HEAD, ZINC PLATE |
| 10 | 2 | 012-210 | WASHER,FLAT,ZN PLD,1/4,PREFERRED |
| 11 | 1 | 2005997-03 | LATCH, LOOP OVER GATE |
| 12 | 1 | 013-605 | PIN |
| 13 | 2 | 012-210 | WASHER,FLAT,ZN PLD,1/4,PREFERRED |
| 14 | 1 | 011-545 | NUT,HEX,NYLON,LOCK,1/4-20,PREFERRED |
| 15 | 1 | 2017380 | BRACKET, GATE SENSOR (Option) |
| 16 | 2 | 011-027 | SCREW, MACHINE P/H, ZP (Option) |
| 17 | 1 | 028-207-1 | PROXIMITY SENSOR, M18, 2-WIRE, M12 (Option) |

## 13.3 DOCK LIFT PARAMETERS

This is a partial list of available Dock Lifts by size, capacity, lowered/raised heights, and Powerpack options.

Contact your Blue Giant Dealer regarding a full list of options.

| Deck Length | | Capacity Rated/Lifting | | Lowered Height | | Vertical Travel | | Raised Height | | Powerpack Options | | | | | | | |
|---|---|---|---|---|---|---|---|---|---|---|---|---|---|---|---|---|---|
| | | | | | | | | | | 1.9 gpm | | 3.8 gpm | | 5 gpm | | 7.3 gpm | |
| | | | | | | | | | | *Lift Time | Motor | *Lift Time | Motor | *Lift Time | Motor HP | *Lift Time | Motor |
| in. | mm | lbs | kg | in. | mm | in. | mm | in. | mm | sec. | HP | sec. | HP | sec. | HP | sec. | HP |
| 96 | 2438 | 5000 | 2273 | 10 | 254 | 59 | 1499 | 69 | 1753 | 52 | 3 | 26 | 5 | 20 | 7.5 | 14 | 10 |
| | | 6000 | 2727 | | | | | | | | | | | | | | |
| | | 8000 | 3636 | 12 | 305 | 59 | 1499 | 71 | 1803 | 114 | 3 | 57 | 5 | 43 | 5 | 30 | 7.5 |
| | | 10,000 | 4545 | 14 | 356 | 59 | 1499 | 73 | 1854 | 114 | 3 | 57 | 5 | 43 | 7.5 | 30 | 10 |
| | | 12,000 | 5454 | 14 | 356 | 57 | 1448 | 71 | 1803 | 114 | 3 | 57 | 5 | 43 | 7.5 | 30 | 10 |
| | | 15,000 | 6818 | | | | | | | | | | | | | | |
| | | 20,000 | 9091 | 21 | 533 | 57 | 1448 | 78 | 1981 | 114 | 3 | 57 | 5 | 43 | 5 | 30 | 7.5 |
| 108 | 2743 | 5000 | 2273 | 12 | 305 | 59 | 1499 | 71 | 1803 | 57 | 3 | 29 | 5 | 22 | 7.5 | 15 | 10 |
| | | 6000 | 2727 | 12 | 305 | 59 | 1499 | 71 | 1803 | 114 | 3 | 57 | 5 | 40 | 5 | 30 | 7.5 |
| | | 8000 | 3636 | | | | | | | | | | | | | | |
| | | 10,000 | 4545 | 14 | 356 | 59 | 1499 | 73 | 1854 | 114 | 3 | 57 | 5 | 43 | 7.5 | 30 | 10 |
| | | 12,000 | 5454 | | | | | | | | | | | | | | |
| | | 15,000 | 6818 | 21 | 533 | 59 | 1499 | 80 | 2032 | 165 | 3 | 83 | 5 | 63 | 5 | 43 | 7.5 |
| | | 20,000 | 9091 | | | | | | | | | | | | | | |
| 120 | 3048 | 5000 | 2273 | 12 | 305 | 59 | 1499 | 71 | 1803 | 83 | 3 | 42 | 5 | 32 | 7.5 | 22 | 10 |
| | | 6000 | 2727 | | | | | | | | | | | | | | |
| | | 8000 | 3636 | 12 | 305 | 59 | 1499 | 71 | 1803 | 127 | 3 | 64 | 5 | 48 | 5 | 33 | 7.5 |
| | | 10,000 | 4545 | 14 | 356 | 59 | 1499 | 73 | 1854 | 127 | 3 | 64 | 5 | 48 | 7.5 | 33 | 10 |
| | | 12,000 | 5454 | | | | | | | | | | | | | | |
| | | 15,000 | 6818 | 21 | 533 | 58 | 1473 | 79 | 2007 | 165 | 3 | 83 | 5 | 63 | 5 | 43 | 7.5 |
| | | 20,000 | 9091 | | | | | | | | | | | | | | |
| 144 | 3658 | 5000 | 2273 | 12 | 305 | 59 | 1499 | 71 | 1803 | 93 | 3 | 47 | 5 | 36 | 7.5 | 25 | 10 |
| | | 6000 | 2727 | 12 | 305 | 59 | 1499 | 71 | 1803 | 186 | 3 | 93 | 5 | 71 | 5 | 49 | 7.5 |
| | | 8000 | 3636 | | | | | | | | | | | | | | |
| | | 10,000 | 4545 | 14 | 356 | 59 | 1499 | 73 | 1854 | 186 | 3 | 93 | 5 | 71 | 5 | 49 | 7.5 |
| | | 12,000 | 5454 | | | | | | | | | | | | | | |
| | | 15,000 | 6818 | 21 | 533 | 59 | 1499 | 80 | 2032 | 186 | 3 | 93 | 5 | 71 | 5 | 49 | 7.5 |
| | | 20,000 | 9091 | | | | | | | | | | | | | | |

*Several capacities of Powerpack are available based on the installation requirements.

The 3.86GPM Powerpack is the standard capacity unit.

The 1.9GPM Powerpacks times are approximately 2.0 times multiple of the standard capacity unit.

The 5.0GPM Powerpacks times are approximately 0.76 times multiple of the standard capacity unit.

The 7.3GPM Powerpacks times are approximately 0.52 times multiple of the standard capacity unit.

Faster lift times are available, contact your Blue Giant Dealer.

| Powerpack | Dimension | | | | | | Shipping Weight | |
|---|---|---|---|---|---|---|---|---|
| | Length | | Width | | Height | | | |
| | in. | mm | in. | mm | in. | mm | lbs | kg |
| 3HP | 15 | 385 | 15 | 385 | 26 | 660 | 55 | 25 |
| 5HP | 15 | 385 | 17 | 431 | 28 | 711 | 70 | 32 |
| 7.5HP | 22 | 558 | 24 | 609 | 30 | 756 | 175 | 80 |
| 10HP | 22 | 558 | 24 | 609 | 32 | 812 | 200 | 91 |
| 3HP can be substituted up to 10,000 lbs (4,545 kg) capacity models | | | | | | | | |

# 14.0 POWERPACK PART IDENTIFICATION

The assembly and parts of the Powerpack (Pit or Remote) are listed below for easy reference.

Refer to the electrical drawings for specific wiring requirements

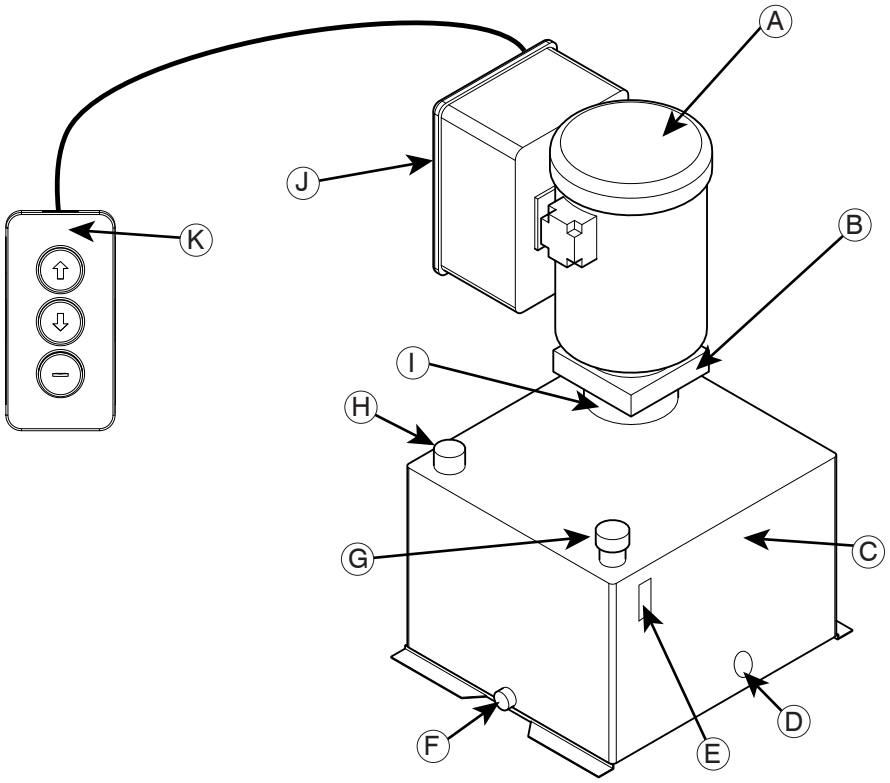


| ITEM | QTY | DESCRIPTION |
|---|---|---|
| | 1 | Powerpack 3 HP |
| | 1 | Powerpack 5 HP |
| | 1 | Powerpack 7.5 HP |
| | 1 | Powerpack 10 HP |
| A | 1 | Motor |
| B | 1 | Manifold |
| C | 1 | Tank/Reservoir |
| D | 1 | Heater Port |
| E | 1 | Sight Glass Oil Level (Optional) |
| F | 1 | Drain |
| G | 1 | Tank/Reservoir Filler Breather |
| H | 1 | Filler / Vent Hole |
| I | 1 | Pump (not shown) |
| J | 1 | Control Box |
| K | 1 | Push Button Control Pendant |

# 15.0 TROUBLESHOOTING

Use this section to help diagnose issues if the dock lift is not operating as specified.

**DANGER**

- Failure to properly secure the dock lift deck prior to working underneath it may result in bodily injury, or death.
- Engage the Maintenance Strut and Service Stand before working. If both cannot be successfully engaged, contact your Blue Giant Dealer.

**WARNING**

- Do not attempt to install, make repairs, or adjustments. Only a trained and authorized service technician should perform the installation process, make repairs, or make adjustments. Contact your Blue Giant Dealer for assistance.
- Do not service this equipment until you have read and understood all of the safety information and instructions contained herein. Failure to adhere to recommended safety practices in this manual and on the dock lift equipment warning labels could result in death or serious injury.
- Do not conduct maintenance or repairs until adequate barriers have been placed to keep warehouse and vehicle traffic away from the work area.
- Before doing any electrical work, verify that the power is disconnected and properly tagged or locked out, in accordance with OSHA regulations and approved electrical codes.
- When conducting maintenance, use only Blue Giant approved lubricants. Improper lubrication or adjustments may cause operational problems.

The following description of operating principles is intended as a guide when trouble shooting and making adjustments or repairs. If no fault can be found and equipment fails to operate properly, contact your Blue Giant Dealer.

- Pressing the **UP** push button energizes the pump which supplies fluid under pressure to cylinder for lifting deck. A check valve (inside pump) prevents any back flow of oil through pump when it is shut off.
- Pressing the **DOWN** push button opens the solenoid lowering valve which allows fluid from cylinder to return to reservoir. Optional: the lowering speed controlled by a load lowering valve. Otherwise, the lowering speed is factory set for safe lowering and normally requires no further adjustment.
- A limit switch is used to control upward travel, it is electrically connected in series with the **UP** push button switch on a single push button station.
- Upward travel of the deck is limited by mechanical stops on the leg roller tracks of the lower frame (in some cases internal stops within cylinders are used to limit travel). These stops should never be used to position deck at intended raised height.
- Safety trip bars (optional) actuate limit switches which cut off power to solenoid lowering valve. Lowering valve closes and table stops descending. Adjustment is achieved by moving limit switch actuating arm. There should be between ¼ in. (6 mm) and 1 in. (25 mm) vertical movement of trip bar to actuate any of trip bar switches and must be set to comply with MH29.1 standards.

| PROBLEM | PROBLEM CAUSED |
|---|---|
| Deck will not raise. | **Foreign material lodged between side of deck and pit wall.** Remove and discard foreign material as required.<br>**Equipment or goods parked on dock lift deck.** Remove and test operate the lift. Verify dock lift capacity before resuming.<br>**Low hydraulic oil fluid in power unit.** Damaged hose or other oil leak, repair and refill with approved hydraulic oil as required.<br>**Incorrect motor rotation: three phase power supply only.** Contact qualified personnel to correct.<br>**Fuse and / or overload blown.** Check fuse and / or overload reset.<br>**Filter may have blockages.** Clean or replace suction filter.<br>**Valve may have blockages.** Replace / repair if necessary.<br>**Pump not running at correct system pressure.** Replace / repair if necessary.<br>**UP push button/open circuit.** Check for open circuit in UP limit set improperly contact block or broken wire in harness.<br>**Wrong voltage.** Check line voltage to nameplate voltage.<br>**Motor connected to high voltage connection on lower voltage feed.** Check motor connection to nameplate.<br>**Control fuse blown.** Replace.<br>**Interlock devices.** Check all switches.<br>**Shipping bolts not removed.** Remove.<br>**Hydraulic hose pinched.** Check hose. |
| Lift table does not maintain steady height. | **Oil leak may be present.** Repair leak.<br>**Motor check valve is defective.** Replace, if necessary.<br>**Down solenoid valve is defective.** Replace, if necessary. |
| Lift table locked in “UP” position. When **DOWN** button is pushed, a click can be heard. | **Velocity fuse locked.** Contact your Blue Giant Dealer.<br>**If equipped, lowering speed valve closed.** Open to set proper lowering speed. |

| PROBLEM | PROBLEM CAUSED |
|---|---|
| Deck will not lower. No clicking sound heard when a button is pressed. | **DOWN push button broken** / **open circuit.** Check for open circuit in contact block, broken wire in harness, safety trip bar circuit (if equipped). Scissor leg bushings seized.<br>**Lowering valve defective.** Replace. |
| Deck raises slowly. | **Pressure relief bypassing.** Foreign material lodged between ball and seat. Contact your Blue Giant Dealer.<br>**Faulty Power Pack.** Replace Power Pack.<br>**Weight overload.** Remove weight to until load matches nameplate weight capacity rating. |
| Lip (if present) does not lower. | **Lip plate bent causing hinge to bind.** Repair and lubricate as required.<br>**Foreign material lodged in the lip hinge area.** Clean thoroughly as required.<br>**Chain too short.** Replace. |
| Lip will not lift. | **Tubes dirty.** Clean.<br>**Spring assist lip spring is damaged or missing.** Replace spring.<br>**Chain is too long.** Shorten chain. |
| Deck will not begin to raise immediately when motor begins to run. Usually occurs only after the deck cylinder hose has been replaced with a new hose that was not pre-filled with oil. | **Air is trapped in the deck lifting cylinder.** Bleed off the air. |
| Deck will not raise when **UP** push button is operated. Motor does not attempt to run, no sound is heard from motor/Powerpack/control box | **No power supply to control box.** Trace electrical feed.<br>**Thermal overload tripped open.** Reset.<br>**Faulty control box component (e.g. fuse, touch button, contactor, transformer).** Repair/Replace. |
| Deck will not raise when push button is operated. Motor attempts to run, but power supply breaker switch trips to off position | **Power supply circuit is overloaded by other equipment or components being used on a branch circuit controlled by the same breaker switch.** The power supply line circuit must be upgraded to meet the requirements of the power unit.<br>Wrong size feed supplied to Powerpack. |
| Hydraulic lip does not extend fully. Oil level in reservoir is not low. | **Lip plate bent causing hinge to bind.** Replace.<br>**Foreign material lodged in the lip hinge area.** Clean out material safely. |
| Hydraulic lip lowers slowly in normal temperatures and very slowly in extremely cold weather. Deck lowering speed is correct. | Consider the optional Oil Heater or using Arctic Oil. Opening the needle valve will cause the deck to lower too quickly, which will in turn cause the fail-safe velocity fuse to lock.<br>The lip lowers by gravity and must pivot freely on its full length hinge.<br>**Speed control set too low.** Adjust as needed. |
| Deck lowering speed is too slow or too fast. | **Deck speed not set correctly.** Lowering speed adjustment required, if equipped. |
| Deck raises partially and stops. Motor continues to run and power unit makes more noise than normal | **Oil level in reservoir is low.** Fill oil reservoir with approved hydraulic oil. |
| Deck raises more slowly than normal and level in reservoir is normal | **Pilot operated to close Check Valve (9) will not close.** Replace.<br>**Faulty Powerpack.** Replace. |
| Deck will not lower from fully raised position. Lip does lower | **The fall-safe velocity fuse located at the bottom of the deck cylinder is in the locked or closed position.** Replace. |

# 16.0 OPTIONAL EQUIPMENT

These components are available as additional options for the DL dock lifts.

## 16.1 CUSTOM LIP CONFIGURATIONS

Dock Lift lips are available in several material types and actuation.

- Lip size and configuration - extended length and multiple lips
- Aluminum lips
- Split lips
- Taper lip and custom shaped lips
- Spring assisted lips
- Hydraulically actuated lip.

## 16.2 SAFETY FEATURES

These features provide greater personnel protection and operating awareness.

- Layout options for floor and/or deck mounting of bolted guard rails
- Keyed lock and E-Stop push button options on push button controls. Keyed lock provides greater security and access control. E-Stop provides protection for personnel and material.
- Warning bell to indicate lift in motion.
- Warning horn, with adjustable volume control, on Powerpack to indicate lift in motion.
- Flashing amber warning beacon on Powerpack to indicate lift in motion.
- Factory set up travel limit switch limits the maximum vertical elevation of the lift.
- Accordion safety skirting acts as a barrier to keep under the lift clean and provide personnel awareness.
- Mechanical roll-off barrier to reduce incidents of personnel or material going off the lift during transfer.
- Electric trip bars that stops the lift if any obstructions are sensed during lowering.
- Interlock swing gates to secure the transfer ends of the lift.

## 16.3 CONVENIENCE FEATURES

These features provide a benefit of easy maintenance, re-location, or use.

- Remote, post mounted, or bolted guard rail mounted push button controls permits greater convenience.
- Extension cord for push button controls. Cord length permits greater range of movement.
- Coiled cord for push button controls. Cord reduces slacking and drooping.
- Twist plug cord for push button controls. Cord can be removed for storage and security.
- 24 VAC for faster facility integration.
- Return line oil filter to extend life parts and consumables.
- Low temperature oil improves lift function in colder environments.
- Immersion heater for oil reservoir improves lift function in colder environments.
- 3 HP to 10 HP remote power packs for different speed options.

BLUE GIANT®
BLUE GIANT EQUIPMENT CORPORATION

**Corporate** 410 Admiral Blvd
Mississauga, ON, Canada L5T 2N6
**t** 905.457.3900 **f** 905.457.2313

**USA** 6350 Burnt Poplar Road
Greensboro, NC 27409
www.bluegiant.com

If calling within North America: t 1.800.872.2583 f 1.888.378.5781 © Copyright Blue Giant Equipment Corporation 2023