BLUE GIANT®

AIR BALANCER

ERGONOMIC SOLUTIONS

- Easy and safe movement
- Low maintenace cost
- Adjustable Up/Down speed
- Centrifugal safety brake
- Balance or “float” range 12 inches
- Lubrication free
- Capacity from 54 kg (120lbs) to 635 kg (1400 lbs)
- Vertical travel 1000mm (39”) - 2000mm (78”)
- Required air pressure 100 PSI (min 70 PSI)
- Multiple trolleys and suspension

CORMAC INDUSTRIAL
A BLUE GIANT COMPANY

bluegiant.com

EZ FLOAT HANDLE

Designed for lifting and positioning applications, it replaces the use of the handle away from the load. Gives the operator the feeling of flotation, which allows him to have greater control of the suspended load.

- Capacity is determined by available air pressure and the rated capacity of the stick or hoist
- Steel construction
- Handling variable weight loads
- Ergonomic grip
- Adjustable operating speed
- Compatible with Air Balancers and Pneumatic Hoists
- Pneumatic control

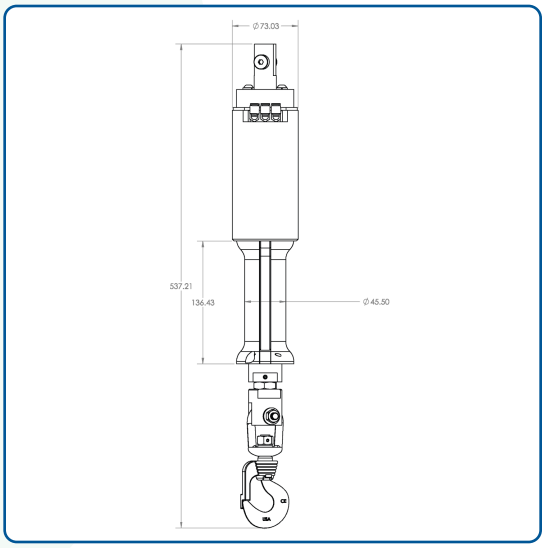

UP DOWN
SERIES UD

Our UD (up/down) air balancer series is optimal for applications where loads are variable and precise positioning is required.

By hand control the operator can control the up and down speed.

- Adjustable speeds up to 11ft/min to 100 PSI
- Adjustable speed max. to 60 - 100 PSI
- Our air balancers are compatible with trolleys of other brands

PRODUCT	CAPACITY	LIFT	ARRANGEMENT	SERIE	SUSPENCION
B	500	W	S	UD	L
B Balancer	150 150 lbs	W Wire rope	S Standard	ZG Zero gravity	L Light duty
	350 350 lbs	C Chain	T Tandem	UD Up/Down	M Medium duty
	500 500 lbs		R Reeved	BB Basic balancer	H Hevy duty

B 500 W S UD L

Example balancer: B E 500 W S UD L

AIR BALANCER
PRODUCT LINE

Basic Air Balancer
Capacity: 159kg (350lbs)
Vertical travel: 2,000mm (78 in.)

Reeved Air Balancer
Capacity: 316kg (700lbs)
Vertical travel: 1,000mm (39 in.)

Tandem Air Balancer
Capacity: 316kg (700lbs)
Vertical travel: 2,000mm (78 in.)

Tandem and Reveed Air Balancer
Capacity: 632kg (1,400lbs)
Vertical travel: 1,000mm (39 in.)

BLUE GIANT®
BLUE GIANT EQUIPMENT CORPORATION

Corporate 410 Admiral Boulevard
Mississauga, ON L5T 2N6
Phone: 905.457.3900 | Toll Free: 800.872.2583

USA 9201 National Turnpike
Louisville, KY 40118
www.bluegiant.com

AUTHORIZED DEALER

Blue Giant offers a full line of dock levelers, dock safety equipment, seals and shelters, accessories, ergonomic and scissor lift equipment and industrial trucks. Concurrent with our continuing product improvement program, specifications are subject to change without notice. Please contact Blue Giant for latest information. Some features illustrated may be optional in certain market areas.